NVIDIA Spectrum SN2000 1U Switch Systems Hardware User Manual

10/25/40/50/100GbE Open Ethernet Switch Systems Models: SN2700, SN2740, SN2410, SN2201, SN2100, SN2010

Table of Contents

Ordering Information 6
SN2700 Ordering Part Numbers 6
SN2410 Ordering Part Numbers 7
SN2100 Ordering Part Numbers 8
SN2010 Ordering Part Numbers 8
SN2201 Ordering Part Numbers 9
Introduction 10
Speed and Switching Capabilities 12
Management Interfaces, PSUs and Fans 13
Features 13
Certifications 13
Installation 14
System Installation and Initialization 14
Safety Warnings 14
Air Flow 14
Package Contents 15
System Mounting Options 16
SN2700 Static Rail Kit 16
Removing the System from the Rack 20
SN2700 Telescopic Rail Kit 20
Removing the System from the Rack 23
SN2740/SN2410 Static Rail Kit 24
SN2100/SN2010 Side by Side Mounting Rail Kit 27
SN2100/SN2010 Static Single Switch Rail Kit 32
SN2201 Tool-Less Rail Kit 34
Tool-Less 4-Post Mounting Rail-Kit 34
Tool-Less 2-Post Mounting Rail-Kit 38
Cable Installation 40
Splitter (Breakout) Cables and Adapters 42
Initial Power On 44
System Bring-Up 45
Configuring Network Attributes Using NVIDIA Onyx (MLNX-OS) 45

Configuring Network Attributes Using Cumulus Linux 48
FRU Replacements 49
Power Supply 49
Fans 50
Interfaces 52
Data Interfaces 52
Supported Passive Cables in SN2010bM 53
Speed 53
I2C/RS232 (Console) 53
Management 54
USB 54
Reset Button 54
Status and Port LEDs 55
LED Notifications 55
System Status LEDs 55
Fan Status LEDs 56
Power Supply Status LEDs 57
Unit Identification LED 59
Bad Port LED 59
Port LEDs 59
Inventory Information 62
Software Management 65
Upgrading Software 65
NVIDIA Onyx (MLNX-OS) Software Upgrade 65
Switch Firmware Update 65
Cumulus Linux Software Upgrade 65
Troubleshooting 66
Specifications 68
SN2700 Series 68
SN2740 Series (End of Life) 69
SN2410 Series 69
SN2100 Series 70
SN2010 Series 71
SN2201 Series 72

Appendixes 73
Accessory and Replacement Parts 73
Thermal Threshold Definitions 74
Interface Specifications 75
QSFP28 Pin Description 75
SFP28 Pin Description 77
RJ-45 CONSOLE and I²C Interface 78
RJ45 to DB9 Harness Pinout 79
RJ45 to RJ45 Harness 79
Disassembly and Disposal 80
Disassembly Procedure 80
Disposal 80
Document Revision History 81

Relevant for Models: SN2700, SN2740, SN2410, SN2100, SN2010 and SN2201.

About this Manual

This manual describes the installation and basic use of NVIDIA Ethernet switches based on the NVIDIA Spectrum IC device.

Ordering Information

See Introduction.

Intended Audience

This manual is intended for IT managers and system administrators.

Related Documentation

	Document	Description
1	*NVIDIA Onyx (MLNX-OS) User Manual*	This document contains information regarding the configuration and management of the NVIDIA Onyx (MLNX-OS) software. See https://www.nvidia.com/en-us/networking/ethernet-switching/onyx/.
2	*Cumulus Linux User Guide*	This document contains information regarding the configuration and management of the Cumulus® Linux® software. See https://docs.nvidia.com/networking-ethernet-software/cumulus-linux-51/ .
3	*Open Network Install Environment (ONIE) Quick Start Guide*	See https://github.com/opencomputeproject/onie/wiki/Quick-Start-Guide/.
4	Hands-on workshops	Cumulus on-site/remote training: https://academy.nvidia.com/en/cumulus-linux-boot-camp/ NVIDIA Onyx on-site/remote training: https://academy.nvidia.com/en/course/onyx/?cm=242
5	On-site/remote services	For any tailor-made service, contact nbu-services-sales@nvidia.com .

Revision History

A list of the changes made to this document are provided in Document Revision History.

Ordering Information

The following table lists ordering information for the available systems.
Please pay attention to the airflow direction when ordering your system. For more details, see Air Flow.

SN2700 Ordering Part Numbers

Part Number	Legacy Part Number	Marketing Description
920-9N101-00F4-0X0	MSN2700-BS2F	NVIDIA Spectrum based 40GbE, 1U Open Ethernet Switch with NVIDIA Onyx (MLNX-OS), 32 QSFP28 ports, 2 Power Supplies (AC), x86 CPU, Standard depth, P2C airflow, Rail Kit, RoHS6
920-9N101-00F4-0C0	MSN2700-BS2FC	NVIDIA Spectrum 40GbE 1U switch w/Cumulus Linux, 32 QSFP28 ports, 2 AC PSUs, x86 2-core, standard depth, P2C airflow, Rail Kit, RoHS6, (Cumulus License Key is required)
920-9N101-00R4-0X0	MSN2700-BS2R	NVIDIA Spectrum based 40GbE, 1U Open Ethernet Switch with NVIDIA Onyx (MLNX-OS), 32 QSFP28 ports, 2 Power Supplies (AC), x86 CPU, Standard depth, C2P airflow, Rail Kit, RoHS6
920-9N101-00F7-0X0	MSN2700-CB2F	Mellanox Spectrum based 100GbE 1U Open Ethernet Switch with Onyx, 32 QSFP28 ports, 2 Power Supplies (AC), x86 CPU, short depth, P2C airflow, Rail Kit
920-9N101-00R7-0X0	MSN2700-CB2R	Spectrum based 100GbE, 1U Open Ethernet Switch with Onyx, 32 QSFP28 ports, 2 Power Supplies (AC), x86 CPU, Short depth, Reverse airflow, Rail Kit, RoHS6
920-9N101-00F7-1C1	MSN2700-CSBFC	Mellanox Spectrum based 100GbE 1U Open Ethernet Switch with Cumulus Linux, 32 QSFP28 ports, 2 Power Supplies (DC), x86 CPU, standard depth, P2C airflow, Rail Kit
920-9N101-00F7-0X4	MSN2700-CS2F	NVIDIA Spectrum based 100GbE, 1U Open Ethernet Switch with NVIDIA Onyx (MLNX-OS), 32 QSFP28 ports, 2 Power Supplies (AC), x86 CPU, Standard depth, P2C airflow, Rail Kit, RoHS6
920-9N101-00F7-0C1	MSN2700-CS2FC	NVIDIA Spectrum 100GbE 1U switch w/Cumulus Linux, 32 QSFP28 ports, 2 AC PSUs, x86 2-core, standard depth, P2C airflow, Rail Kit, RoHS6, (Cumulus License Key is required)
920-9N101-00F7-0N1	MSN2700-CS2FO	NVIDIA Spectrum based 100GbE 1U Open Switch with ONIE, 32 QSFP28 ports, 2 Power Supplies (AC), Standard depth, x86 CPU, P2C airflow, Rail Kit, RoHS6
920-9N101-00R7-0X2	MSN2700-CS2R	NVIDIA Spectrum based 100GbE, 1U Open Ethernet Switch with NVIDIA Onyx (MLNX-OS), 32 QSFP28 ports, 2 Power Supplies (AC), x86 CPU, Standard depth, C2P airflow, Rail Kit, RoHS6
920-9N101-00R7-0C0	MSN2700-CS2RC	NVIDIA Spectrum 100GbE 1U switch w/Cumulus Linux, 32 QSFP28 ports, 2 AC PSUs, x86 2-core, standard depth, C2P airflow, Rail Kit, RoHS6, (Cumulus License Key is required)
920-9N101-00R7-0N0	MSN2700-CS2RO	NVIDIA Spectrum based 100GbE 1U Open Ethernet switch with ONIE, 32 QSFP28 ports, 2 power supplies (AC), x86 CPU, standard depth, C2P airflow, Rail Kit
920-9N101-00F7-1N0	MSN2700-CBBFO	NVIDIA Spectrum based 100GbE, 1U Open Ethernet Switch with ONIE, 32 QSFP28 ports, 2 power-supplies (DC), x86 CPU, short depth, P2C airflow, Rail Kit

SN2410 Ordering Part Numbers

Part Number	Legacy Part Number	Marketing Description
920-9N112-00F7-0X0	MSN2410-BB2F	Mellanox Spectrum based 10GbE/100GbE 1U Open Ethernet switch with Onyx, 48 SFP28 ports and 8 QSFP28 ports, 2 Power Supplies (AC), x86 CPU, short depth, P2C airflow, Rail Kit
920-9N112-00F7-0C3	MSN2410-BB2FC	NVIDIA Spectrum 10GbE/100GbE switch w/Cumulus Linux, 48 SFP28 ports + 8 QSFP28 ports, 2 AC PSUs, x86 2-core, short depth, P2C air flow, Rail Kit, (Cumulus License Key is required)
920-9N112-00F7-0N3	MSN2410-BB2FO	NVIDIA Spectrum based 10GbE/100GbE 1U Open Ethernet switch with ONIE, 48 SFP28 ports, 8 QSFP28 ports, 2 power supplies (AC), x86 dual core, Short depth, P2C airflow, Rail Kit, RoHS6
920-9N112-00R7-0X2	MSN2410-BB2R	NVIDIA Spectrum based 10GbE/100GbE 1U Open Ethernet switch with NVIDIA Onyx (MLNX-OS), 48 SFP28 ports, 8 QSFP28 ports, 2 power supplies (AC), x86 dual core, Short depth, C2P airflow, Rail Kit, RoHS6
920-9N112-00R7-0N1	MSN2410-BB2RO	NVIDIA Spectrum based 10GbE/100GbE 1U Open Ethernet switch with ONIE, 48 SFP28 ports and 8 QSFP28 ports, 2 power supplies (AC), x86 CPU, short depth, C2P airflow, Rail Kit
920-9N112-00R7-0C3	MSN2410-BB2RC	NVIDIA Spectrum based 10GbE/100GbE 1U Open Ethernet switch with Cumulus Linux, 48 SFP28 ports and 8 QSFP28 ports, 2 power supplies (AC), x86 CPU, short depth, C2P airflow, Rail Kit
920-9N112-00F7-0X2	MSN2410-CB2F	NVIDIA Spectrum based 25GbE/100GbE 1U Open Ethernet switch with NVIDIA Onyx (MLNX-OS), 48 SFP28 ports, 8 QSFP28 ports, 2 power supplies (AC), x86 dual core, Short depth, P2C airflow, Rail Kit, RoHS6
920-9N112-00F7-0C2	MSN2410-CB2FC	NVIDIA Spectrum 25GbE/100GbE switch w/Cumulus Linux, 48 SFP28 ports + 8 QSFP28 ports, 2 AC PSUs, x86 2 core, short depth, P2C air flow, Rail Kit, (Cumulus License Key is required)
920-9N112-00F7-0N2	MSN2410-CB2FO	NVIDIA Spectrum based 25GbE/100GbE 1U Open Ethernet switch with ONIE, 48 SFP28 ports, 8 QSFP28 ports, 2 power supplies (AC), x86 dual core, Short depth, P2C airflow, Rail Kit, RoHS6
920-9N112-00R7-0X1	MSN2410-CB2R	NVIDIA Spectrum based 25GbE/100GbE 1U Open Ethernet switch with NVIDIA Onyx (MLNX-OS), 48 SFP28 ports, 8 QSFP28 ports, 2 power supplies (AC), x86 dual core, Short depth, C2P airflow, Rail Kit, RoHS6
920-9N112-00R7-0C2	MSN2410-CB2RC	NVIDIA Spectrum 25GbE/100GbE switch w/Cumulus Linux, 48 SFP28 ports + 8 QSFP28 ports, 2 AC PSUs, x86 2 core, short depth, C2P air flow, Rail Kit, (Cumulus License Key is required)
920-9N112-00R7-1C0	MSN2410-CBBRC	NVIDIA Spectrum based 25GbE/100GbE 1U Open Ethernet switch with Cumulus Linux, 48 SFP28 ports and 8 QSFP28 ports, 2 power supplies (DC), x86 CPU, short depth, C2P airflow, Rail Kit

SN2100 Ordering Part Numbers

Legacy Part Number	Part Number	Marketing Description
920-9N100-00F4-0X0	MSN2100-BB2F	Mellanox Spectrum based 40GbE 1U Open Ethernet Switch with Onyx, 16 QSFP28 ports, 2 Power Supplies (AC), x86 CPU, short depth, P2C airflow. Rail Kit must be purchased separately
920-9N100-00F4-0C0	MSN2100-BB2FC	NVIDIA Spectrum 40GbE 1U switch w/Cumulus Linux, 16 QSFP28 ports, 2 AC PSUs, x86 2 core, short depth, P2C airflow, Rails to be purchased separately, (Cumulus License Key is required)
920-9N100-00R4-0X0	MSN2100-BB2R	NVIDIA Spectrum based 40GbE, 1U Open Ethernet Switch with NVIDIA Onyx (MLNX-OS), 16 QSFP28 ports, 2 AC PSUs, x86 2-core, short depth, C2P airflow, Rail Kit must be purchased separately, RoHS6
920-9N100-00R4-0N0	MSN2100-BB2RO	NVIDIA Spectrum based 40GbE 1U Open Ethernet switch with ONIE, 16 QSFP28 ports, 2 power supplies (AC), x86 CPU, short depth, C2P airflow. Rail Kit must be purchased separately
920-9N100-00F7-0X0	MSN2100-CB2F	NVIDIA Spectrum based 100GbE, 1U Open Ethernet Switch with NVIDIA Onyx (MLNX-OS), 16 QSFP28 ports, 2 AC PSUs, x86 2-core, short depth, P2C airflow, Rail Kit must be purchased separately, RoHS6
920-9N100-00F7-0C0	MSN2100-CB2FC	NVIDIA Spectrum 100GbE 1U switch w/Cumulus Linux, 16 QSFP28 ports, 2 AC PSUs, x86 2-core, short depth, P2C airflow, Rails to be purchased separately, (Cumulus License Key is required)
920-9N100-00F7-0N0	MSN2100-CB2FO	NVIDIA Spectrum based 100GbE 1U Open Switch with ONIE, 16 QSFP28 ports, 2 AC PSUs, x86 2-core, short depth, P2C airflow, Rail Kit must be purchased separately, RoHS6
920-9N100-00R7-0X0	MSN2100-CB2R	NVIDIA Spectrum based 100GbE, 1U Open Ethernet Switch with NVIDIA Onyx (MLNX-OS), 16 QSFP28 ports, 2 AC PSUs, x86 2-core, short depth, C2P airflow, Rail Kit must be purchased separately, RoHS6
920-9N100-00R7-0C0	MSN2100-CB2RC	NVIDIA Spectrum 100GbE 1U switch w/Cumulus Linux, 16 QSFP28 ports, 2 AC PSUs, x86 2-core, short depth, C2P airflow, Rails to be purchased separately, (Cumulus License Key is required)
920-9N100-00R7-0N0	MSN2100-CB2RO	NVIDIA Spectrum based 100GbE 1U Open Ethernet switch with ONIE, 16 QSFP28 ports, 2 power supplies (AC), x86 CPU, short depth, C2P airflow. Rail Kit must be purchased separately

SN2010 Ordering Part Numbers

Part Number	Legacy Part Number	Marketing Description
920-9N110-00F7-0X2	MSN2010-CB2F	NVIDIA Spectrum-based 25GbE/100GbE, 1U Open Ethernet Switch with NVIDIA Onyx, 18 SFP28 and 4 QSFP28 ports, 2 Power Supplies (AC), short depth, x86 quad core, P2C airflow, Rail Kit must be purchased separately

Part Number	Legacy Part Number	Marketing Description
920-9N110-00F7-0C3	MSN2010-CB2FC	NVIDIA Spectrum-based 25GbE/100GbE 1U switch w/Cumulus Linux, 18 SFP28 and 4 QSFP28 ports, 2 AC PSUs, x86 4-core, short depth, P2C airflow, Rails to be purchased separately, (Cumulus License is provided at no cost with purchase of SUP-SN2010-CL-XX)
920-9N110-00F7-0C0	MSN2010-CB2F3C	NVIDIA Spectrum based 25GbE/100GbE, 1U Open Ethernet switch with Cumulus Linux, 18 SFP28 and 4 QSFP28 ports,2 power supplies (AC), x86 CPU, 32G RAM and 30G SSD, short depth, P2C airflow, Rail Kit must be purchased separately
920-9N110-00F7-0N0	MSN2010-CB2FO	NVIDIA Spectrum-based 25GbE/100GbE, 1U Open Ethernet Switch with ONIE, 18 SFP28 ports and 4 QSFP28 ports, 2 Power Supplies (AC), x86 quad core, short depth, P2C airflow, Rail Kit must be purchased separately
920-9N110-00R7-0X2	MSN2010-CB2R	NVIDIA Spectrum-based 25GbE/100GbE, 1U Open Ethernet Switch with NVIDIA Onyx, 18 SFP28 ports and 4 QSFP28 ports, 2 Power Supplies (AC), short depth, x86 quad core, C2P airflow, Rail Kit must be purchased separately
920-9N110-00R7-0C2	MSN2010-CB2RC	Spectrum-based 25GbE/100GbE 1U switch w/Cumulus Linux, 18 SFP28 and 4 QSFP28 ports, 2 AC PSUs, x86 4-core, short depth, C2P airflow, Rails to be purchased separately, (Cumulus License is provided at no cost with purchase of SUP-SN2010-CL-XX)
920-9N110-00R7-0N0	MSN2010- CB2RO	NVIDIA Spectrum based 25GbE/100GbE 1U Open Ethernet switch with ONIE, 18 SFP28 ports and 4 QSFP28 ports, 2 power supplies (AC), x86 CPU, short depth, C2P airflow. Rail Kit must be purchased separately

SN2201 Ordering Part Numbers

Part Number	Legacy Part Number	Marketing Description
920-9N110-00F1-0C0	MSN2201-CB2FC	Nvidia Spectrum based 1GBase-T/100GbE 1U Open Ethernet switch with Cumulus Linux, 48 RJ45 ports and 4 QSFP28 ports, Dual Power Supply (AC), x86 CPU, short depth, P2C airflow, 4-post Rail kit.
920-9N110-00F1-0N1	MSN2201-CB2FO	Nvidia Spectrum based 1GBase-T/100GbE 1U Open Ethernet switch with ONIE, 48 RJ45 ports and 4 QSFP28 ports, Dual Power Supply (AC), x86 CPU, short depth, P2C airflow, 4-post Rail kit.
920-9N110-00R1-0C0	MSN2201-CB2RC	Nvidia Spectrum based 1GBase-T/100GbE 1U Open Ethernet switch with Cumulus Linux, 48 RJ45 ports and 4 QSFP28 ports, Dual Power Supply (AC), x86 CPU, short depth, C2P airflow, 4-post Rail-kit.
920-9N110-00R1-0N1	MSN2201-CB2RO	Nvidia Spectrum based 1GBase-T/100GbE 1U Open Ethernet switch with ONIE, 48 RJ45 ports and 4 QSFP28 ports, Dual Power Supply (AC), x86 CPU, short depth, C2P airflow, 4-post Rail kit.

Introduction

NVIDIA Spectrum® based 1U switch systems are an ideal spine and Top of Rack (ToR) solution, allowing maximum flexibility, with port speeds spanning from 10Gb/s to 100Gb/s per port, and port density that enables full rack connectivity to any server at any speed. The uplink ports allow a variety of blocking ratios that suit any application requirement. Powered by the NVIDIA Spectrum ASIC, the systems carry whopping switching and processing capacities in a compact 1U form factor. Keeping with the NVIDIA tradition of setting performance record switch systems, the NVIDIA Spectrum-based systems introduce the world's lowest latency for 100GbE switching and routing elements, and do so while having the lowest power consumption in the market. They enable the use of 10, 25, 40, 50 and 100GbE in a large scale without changing power infrastructure facilities.

The NVIDIA Spectrum-based 1U switch systems are a part of NVIDIA's complete end-to-end solution, which provides 10GbE through 100GbE interconnectivity within the data center. Other devices in this solution include ConnectX®-4 based network interface cards, and LinkX® copper or fiber cabling/ transceivers. This end-to-end solution is topped with NEO, a management application that relieves some of the major obstacles standing in the way when deploying a network. NEO enables a fully certified and interoperable design, speeds up time to service and RoI. The systems introduce hardware capabilities for multiple tunneling protocols that enable increased reachability and scalability for today's data centers. Implementing MPLS, NVGRE and VXLAN tunneling encapsulations in the network layer of the data center allows more flexibility for terminating a tunnel by the network, in addition to termination on the server endpoint.

While NVIDIA Spectrum provides the thrust and acceleration that powers the switch systems, they get yet another angle of capabilities, running with a powerful x86-based processor, which allows them to not only be the highest performing switch fabric elements, but also grants them the ability to incorporate a Linux running server into the same device. This opens up multiple application aspects of utilizing the high CPU processing power and the best switching fabric, to create a powerful machine with unique appliance capabilities that can improve numerous network implementation paradigms. The NVIDIA Spectrum-based 1U switch systems support the Open Network Install Environment (ONIE) for zero touch installations of network operating systems. While all Ethernet systems can be purchased preloaded with NVIDIA Onyx (MLNX-OS), the SN2000 switches are offered with Cumulus Linux as well, and support SONiC (Software for Open Networking in the Cloud) as an alternative operating system.

For a full list of all available ordering options, see .Ordering Information vAdding_SN2201.

Front View

SN2700



SN2740

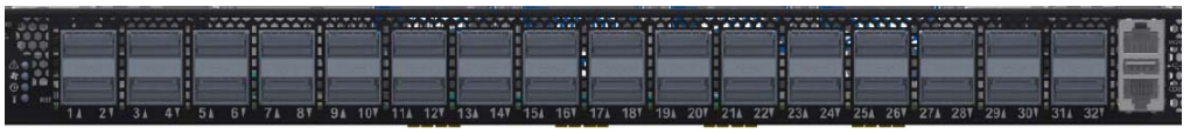

SN2410

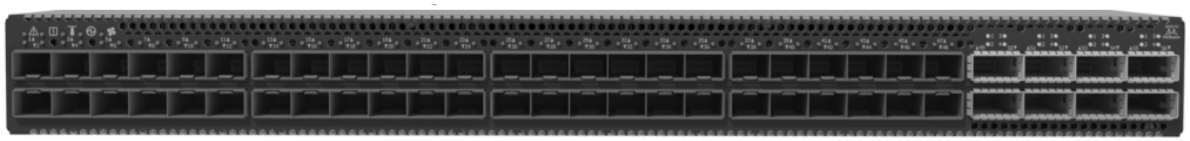

SN2100



SN2010



Rear View

SN2700 and SN2410



SN2740



SN2100

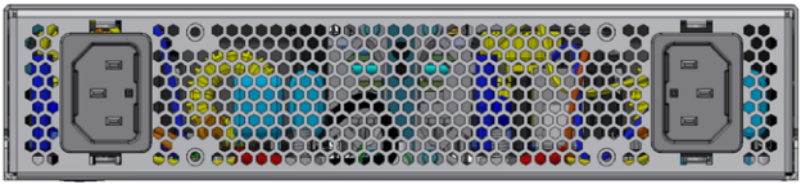

SN2010



SN2201



SN2201



Speed and Switching Capabilities

The table below describes maximum throughput and interface speed per system model.

System Model	1GbT RJ45 Interfaces	1/10/25GbE SFP28 Interfaces*	40/50/100GbE QSFP28 Interfaces*	Max Throughput
SN2700	32**	64 (using QSFP to SFP splitter cables)	32	6.4Tb/s
SN2740	32**	64 (using QSFP to SFP splitter cables)	32	6.4Tb/s
SN2410	48*+8**	Total 64, 48SFP+16 (using QSFP to SFP splitter cables)	8	4Tb/s

System Model	1GbT RJ45 Interfaces	1/10/25GbE SFP28 Interfaces*	40/50/100GbE QSFP28 Interfaces*	Max Throughput
SN2100	16**	64 (using QSFP to SFP splitter cables)	16 (or 32 50GbE interfaces when using QSFP to 2xQSFP splitter cables)	3.2Tb/s
SN2010	18*+4**	Total 34 - 18SFP+16 (using QSFP to SFP splitter cables)	4 (or 8 50GbE interfaces when using QSFP to 2xQSFP splitter cables)	1.7Tb/s
SN2201	48+4**	16 (using QSFP to SFP splitter cables)	4 (or 8 50GbE interfaces when using QSFP to 2xQSFP splitter cables)	448Gb/s

(*) Requiring a 1GBT SFP module
(**) Requiring a QSA adapter and a 1GBT SFP module

Management Interfaces, PSUs and Fans

The table below lists the various management interfaces, PSUs and fans per system model.

System Model	USB	MGT	Console	PSU	Fan
SN2700	Rear	Rear (2 ports)	Rear	2 units	4 units
SN2740	Front	Front (1 port)	Front	2 units	4 units
SN2410	Rear	Rear (2 ports)	Rear	2 units	4 units
SN2100	Front (mini USB)	Front (1 port)	Front	2 units (non-replaceable)	4 units (non-replaceable)
SN2010	Front	Front (1 port)	Front	2 units (non-replaceable)	4 units (non-replaceable)
SN2201	Front	Front (1 port)	Front	2 units	4 units

Features

For a full feature list, please refer to the system's product brief. Go to https://www.nvidia.com/en-us/networking/. In the main menu, click on Products > Ethernet Switch Systems, and select the desired product page.

Certifications

The list of certifications (such as EMC, Safety and others) per system for different regions of the world is located on the NVIDIA website at http://www.mellanox.com/page/environmental_compliance.

Installation

System Installation and Initialization

Installation and initialization of the system require attention to the normal mechanical, power, and thermal precautions for rack-mounted equipment.

⚠ The rack mounting holes conform to the EIA-310 standard for 19-inch racks. Take precautions to guarantee proper ventilation in order to maintain good airflow at ambient temperature.

⚠ Unless otherwise specified, NVIDIA products are designed to work in an environmentally controlled data center with low levels of gaseous and dust (particulate) contamination. The operation environment should meet severity level G1 as per ISA 71.04 for gaseous contamination and ISO 14644-1 class 8 for cleanliness level.

The installation procedure for the system involves the following phases:

Step	Procedure	See
1	Follow the safety warnings	Safety Warnings
2	Pay attention to the air flow consideration within the system and rack	Air Flow
3	Make sure that none of the package contents is missing or damaged	Package Contents
4	Mount the system into a rack enclosure	19" System Mounting Options
5	Power on the system	Initial Power On
6	Perform system bring-up	System Bring-Up
7	[Optional] FRU replacements	FRU Replacements

Safety Warnings

Prior to the installation, please review the Safety Warnings. Note that some warnings may not apply to all models.

Air Flow

⚠
- The following information does not apply to SN2100/SN2010. In the SN2100/SN2010 systems, the fan units are non-replaceable.
- The drawings are provided for illustration purposes only. The panel and modules design may vary depending on the system.

The systems are offered with two air flow patterns:

- Power (rear) side inlet to connector side outlet - marked with blue power supplies/fans FRUs' handles or blue dots that are placed on the power inlet side.
  Air Flow Direction Marking - Power Side Inlet to Connector Side Outlet



- Connector (front) side inlet to power side outlet - marked with red power supplies/fans FRUs' handles or red dots that are placed on the power inlet side.
  Air Flow Direction Marking - Connector Side Inlet to Power Side Outlet



All servers and systems in the same rack should be planned with the same airflow direction. All FRU components need to have the same air flow direction. A mismatch in the air flow will affect the heat dissipation.

The table below provides an air flow color legend and respective OPN designation.

Direction	Description and OPN Designation
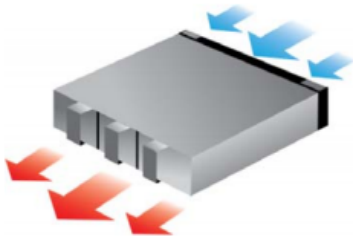	Connector side inlet to power side outlet. The airflow direction is indicated by red latches or by red dots that are placed on the power inlet side. OPN designation is "-R".
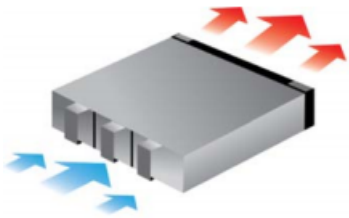	Power side inlet to connector side outlet. The airflow direction is indicated by blue latches or by blue dots that are placed on the power inlet side. OPN designation is "-F".

Package Contents

Before installing your new system, unpack it and check against the parts list below that all the parts have been sent. Check the parts for visible damage that may have occurred during shipping.
The SN2700 and SN2410 package content is as follows:

- 1 - System
- 1 - Rail kit
- 1 - Power cable for each power supply unit - Type C13-C14
- 1 - Cable retainer for each power supply unit
- 1 - DB9 to RJ-45 2m harness
- 1 - RJ-45 to RJ-45 2m harness

The SN2100/SN2010 package content is as follows:

- 1 - System
- 1 - Power cable for each power supply unit - Type C13-C14
- 1 - DB9 to RJ-45 2m harness

⚠ A designated rail kit for the SN2100/SN2010 systems can be purchased separately.

The SN2201 package content is as follows:

- 1 - System
- 1 - Rail kit
- 1 - Power cable for each power supply unit - Type C13-C14
- 1 - DB9 to RJ-45 2m harness
- 1 - RJ-45 to RJ-45 2m harness

⚠ If anything is damaged or missing, contact your sales representative at support@mellanox.com.

System Mounting Options

The systems are shipped with the rail-kits specified in the following table:

System Model	Rail Kit
SN2700	SN2700 Static Rail Kit
	Optional: SN2700 Telescopic Rail Kit
SN2410, SN2740	SN2740/SN2410 Static Rail Kit
SN2100, SN2010	The systems are shipped without a rail kit. A designated rail kit can be purchased separately. For installation instructions, see SN2100/SN2010 Side by Side Mounting Rail Kit.
SN2201	SN2201 Tool-Less Rail Kit

SN2700 Static Rail Kit

Part Number	Legacy Part Number	Rack Size and Rack Depth Range
930-9BRKT-00JC-000	MTEF-KIT-A	Short (17”-24”) or Standard (24”-34”)

The following parts are included in the static rail kit (see figure below):

- 2x Rack mount rails (A)
- 2x Rack mount brackets (B)
- 2x Rack mount blades (C)
- 8x M6 Standard cage nuts[1] [2] and 8x M6 Standard pan-head Phillips screws[1] (D)
- 4x Phillips100 DEG F.H TYPE-I ST.ST 6-32 X 1/4 screws with a round patch (E)

[1] Other threads are available by special order: M5, 10-32, 12-24. [2] G-type cage-nut is available by special order.

Rack Rail Kit Parts

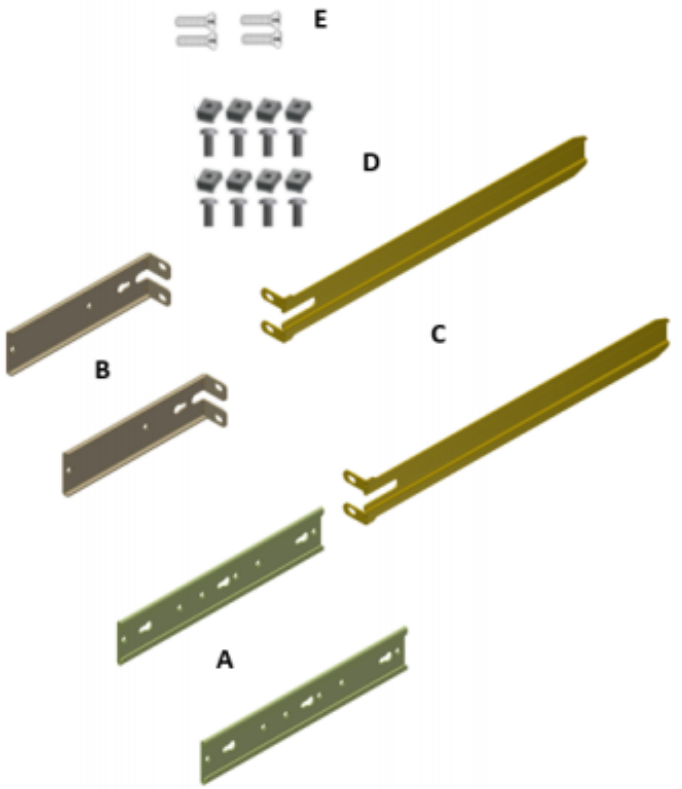

Prerequisites:

Before mounting the system to the rack, select the way you wish to place the system. Pay attention to the airflow within the rack cooling, connector and cabling options.

While planning how to place the system, consider the two installation options shown in the figure below, and review the following points:

- Make sure the system air flow is compatible with your installation selection. It is important to keep the airflow within the rack in the same direction.
- Note that the part of the system to which you choose to attach the rails (the front panel direction, as demonstrated in Option 1 or the FRUs direction, as demonstrated in Option 2) will determine the system's adjustable side. The system's part to which the brackets are attached will be adjacent to the cabinet.
- The FRU side is extractable. Mounting the rack brackets inverted to the FRU side (Option 2) will allow you to slide the FRUs, in and out.

Installation Option 1 & Option 2

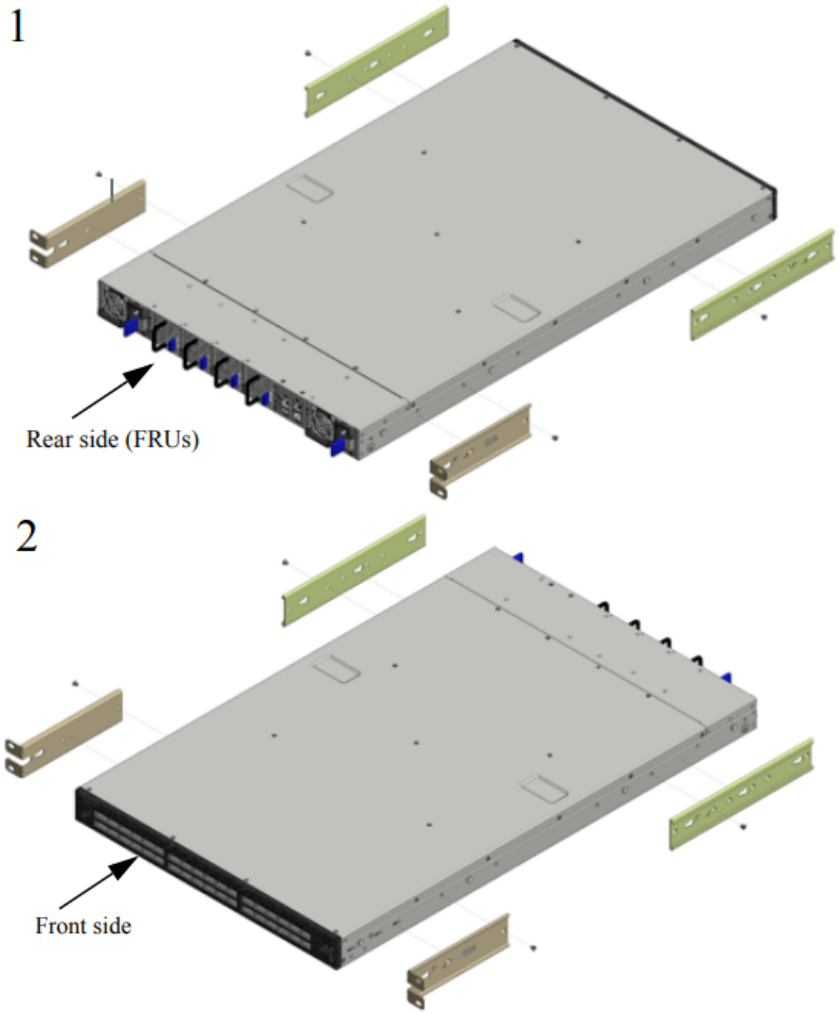

To mount the system into the rack:

> At least two people are required to safely mount the system in the rack.

1. Attach the left and right rack mount rails (A) to the switch, by gently pushing the switch chassis' pins through the slider key holes, until locking occurs.
2. Secure the chassis in the rails by screwing 2 flat head Phillips screws (E) in the designated points with a torque of 1.5±0.2 Nm.

Attaching the Rails to the Chassis

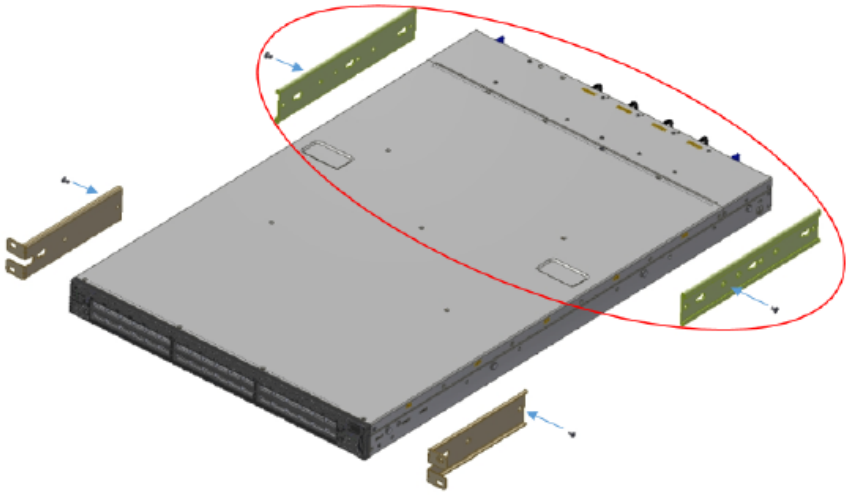

3. Attach the left and right rack mount brackets (B) to the switch, by gently pushing the switch chassis' pins through the slider key holes, until locking occurs. Secure the system in the brackets by screwing the remaining 2 flat head Phillips screws (E) in the designated points with a torque of 1.5±0.2 Nm.
   Attaching the Brackets to the Chassis

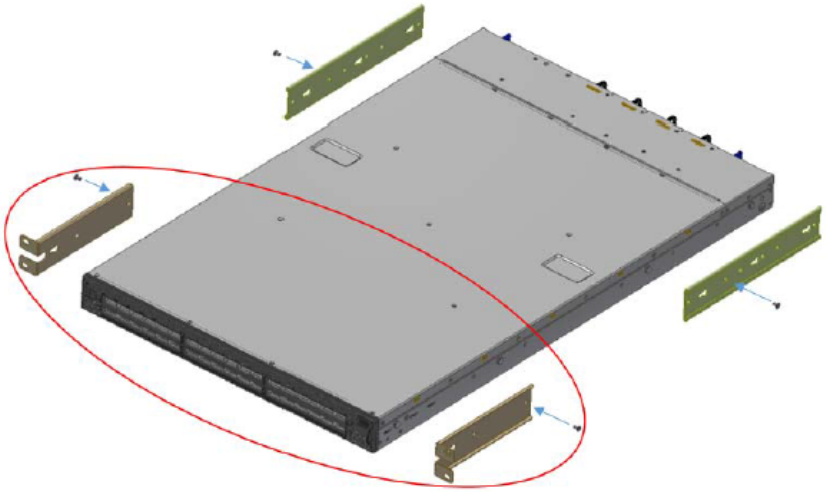

4. Install 8 cage nuts in the desired slots of the rack: 4 cage nuts in the non-extractable side (in the top and bottom holes only) and 4 cage nuts in the extractable side.
   Installing the Cage Nuts



⚠ While each rack U (unit) consists of three holes, the cage nut should be installed vertically with its ears engaging the top and bottom holes only.

While your installation partner is supporting the system's weight, perform the following steps:

5. Mount the system into the rack enclosure, and attach the brackets installed on the system to the rack's posts. Secure the brackets to the rack's posts by inserting four M6 screws in the designated cage nuts, as described in the figure below. Do not tighten the screws yet.
   Attaching the Brackets to the Rack
   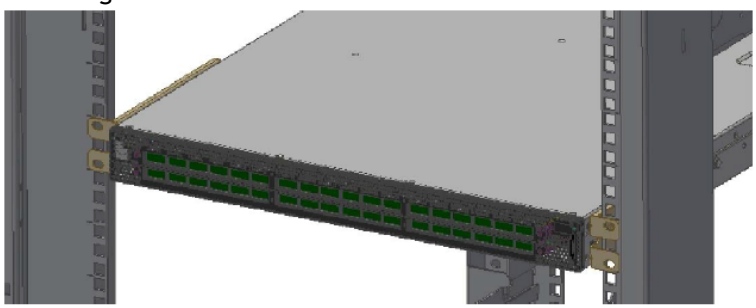
6. Slide the two blades into the left and right rails, and adjust them to fit your rack's depth. Use four M6 screws (D) to fix the blades into the rack. Do not tighten the screws yet.
   Sliding the Blades in the Rails
   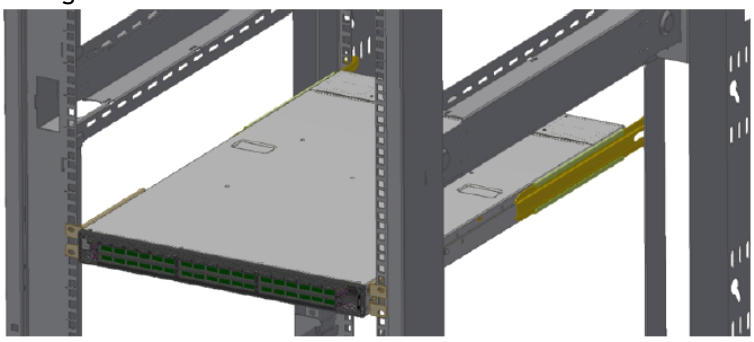
7. Secure the system in the rack by tightening the 8 screws inserted in Step 5 and Step 6 with a torque of 4.5±0.5 Nm.

Removing the System from the Rack

To remove a unit from the rack:

1. Turn off the system and disconnect it from peripherals and from the electrical outlet.
   While your installation partner is supporting the system's weight:
2. Loosen the screws attaching the brackets to the rack. Do not remove them yet.
3. Loosen the screws attaching the blades to the rack, and pull the blades towards you, while your partner is holding the system.
4. Extract the loosened screws from Step 2 and dismount the system from the rack.
5. Remove the rails and brackets from the chassis by unscrewing 8 screws.

SN2700 Telescopic Rail Kit

⚠ The telescopic rail kit is not included in the system's package, and can be purchased separately.

There are two installation kit options:

- Standard depth systems should be mounted using the standard rail kit.
- Short depth systems can be mounted using either of the rail kits.

Kit Part Number	Kit Legacy Part Number	Rack Size and Rack Depth Range
930-9BRKT-00JD-000	MTEF-KIT-B	Short: 17"-24" (43.1 to 61 cm)
930-9NRKT-00JT-000	MTEF-KIT-S	Standard: 24"-34" (61 to 86.3 cm)

The following parts are included in the rail kit package (see figure below):

- 1x Right inner rail (A) +2x Outer rails (C) - Bundled
- 1x Left inner rail (B) + 2x Outer rails (D) - Bundled
- 10x M6 Standard cage nuts[1] [2] and 10x M6 Standard pan-head Phillips screws[1] (E)
- 2x Phillips100 DEG F.H TYPE-I ST.ST 6-32 X 1/4 screw with a round patch (F)

[1] Other threads are available by special order: M5, 10-32, 12-24. [2] G-type cage-nut is available by special order.

Rack Rail Kit Parts

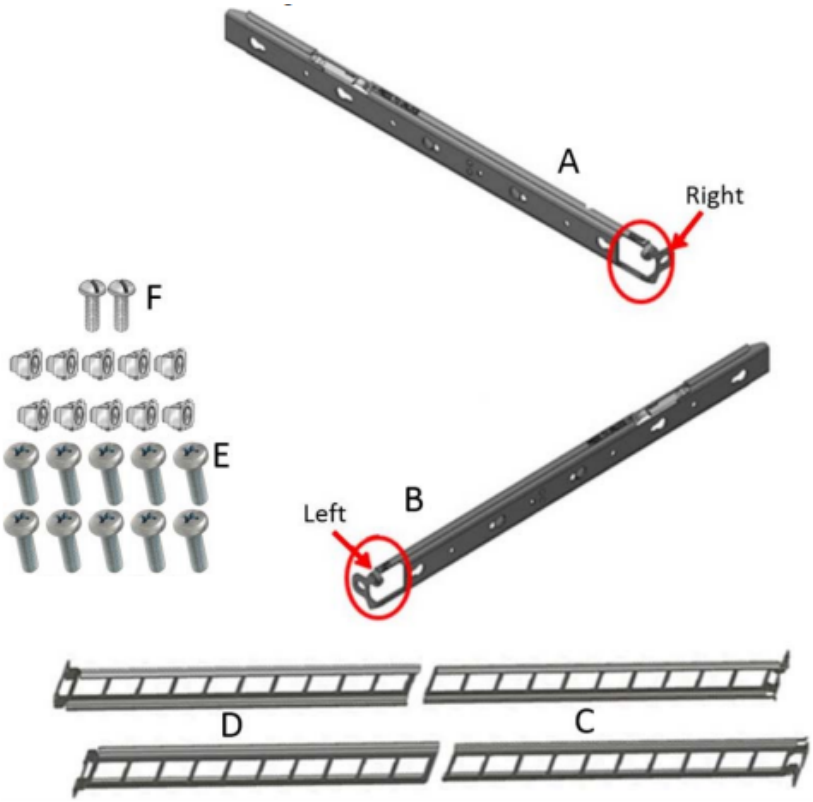

Prerequisites

> ⚠ The rails must be separated prior to the installation procedure.

To separate the rails:

1. Extend the rail assembly by pulling the extension outwards (D).
2. Extract rail A from rail C by pushing it outside from the rear part of the assembly. To allow complete separation of rail A from rail C, press the quick-release latch.

Rails Separation

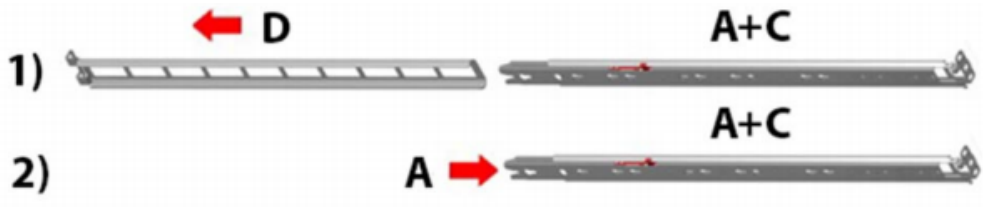

Before mounting the system to the rack, select the way you wish to place the system. Pay attention to the airflow within the rack cooling, connector and cabling options.

While planning how to place the system, review the following points:

- Make sure the system air flow is compatible with your installation selection. It is important to keep the airflow within the rack in the same direction.
- In case there are cables that cannot bend within the rack, or in case more space is needed for cable bending radius, it is possible to recess the connector side or the FRU side by 3" or 4" (7.62 or 10.16cm) by optional placement of the system's rails.
- The FRU side is extractable. Mounting the sliding rail inverted to the system will allow you to slide the FRU side of the system, in and out.

To mount the system into the rack:

1. Insert 10 cage nuts into the desired slots of the rack: 4 cage nuts in the non-extractable side and 6 cage nuts in the extractable side.
   Installing the Cage Nuts



2. Mount both of the outer rails (C+D) into the rack (as illustrated below), and use 8 standard pan-head screws (E) to fix them to the rack. Do not tighten the screws yet.
   Mounting the Outer Rails into the Rack

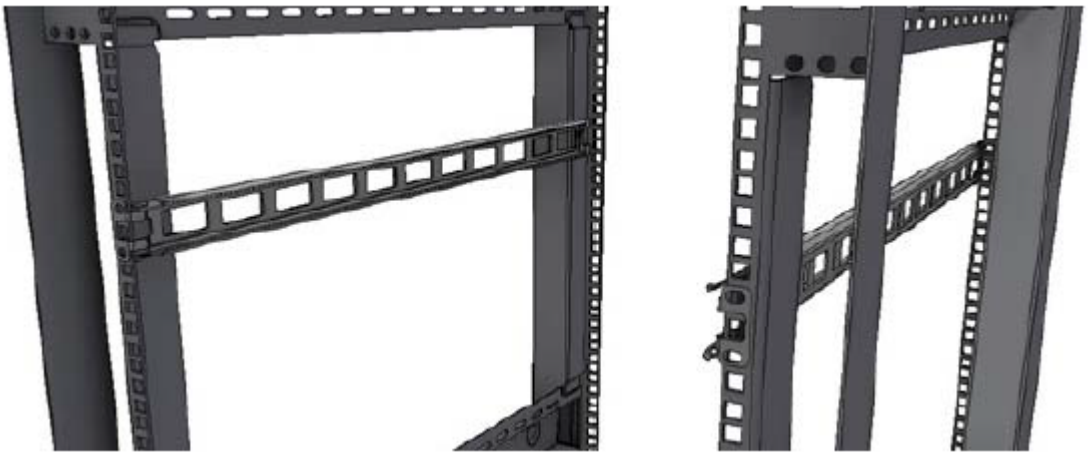

3. If cable accommodation is required, route the power cable and/or Eth cable through either of the outer rails.
4. Attach left and right inner rails (A+B) to the switch sides, by gently pushing the switch chassis' pins through the slider key holes, until locking occurs.

Attaching the Inner Rails

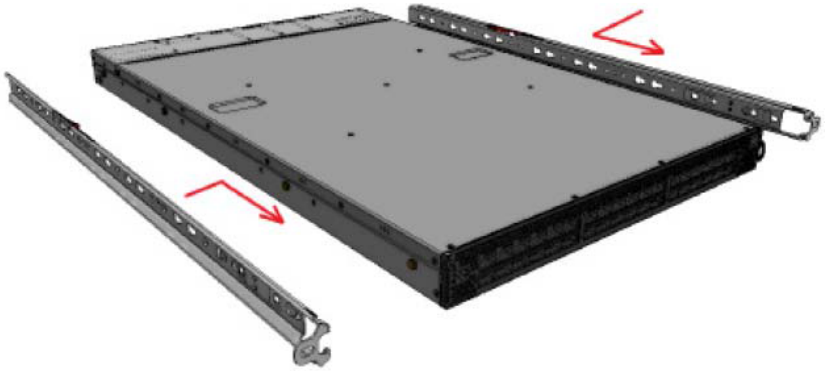

5. Secure the chassis in the inner rails by screwing the 2 flat head Phillips screws (F) in the designated points with a torque of 1.5±0.2 Nm.
   Securing the Chassis in the Inner Rails

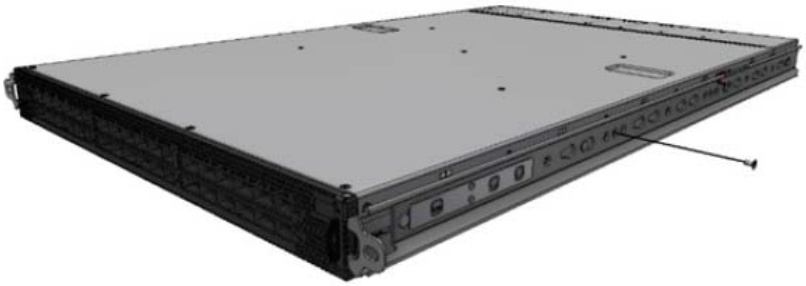

6. Slide the switch into the rack by carefully pushing the inner rails into the outer rails installed on the rack.
   Sliding the Switch into the Rack

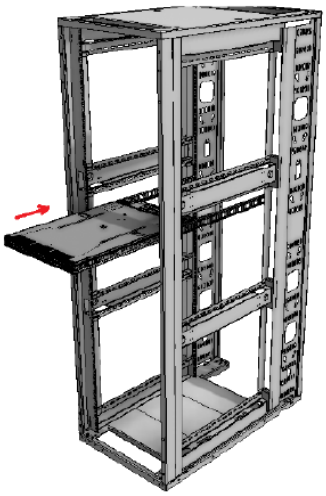

7. When fully inserted, fix the switch by closing the remaining 2 screws in the middle and tightening the 8 screws inserted in Step 2 with a torque of 4.5±0.5 Nm.

Removing the System from the Rack

To remove a unit from the rack:

1. Turn off the system and disconnect it from peripherals and from the electrical outlet.

2. Unscrew the two M6 screws securing the front of the inner rails' ears to the outer rails and to the rack.
3. Pull the unit out until braking is felt. For safety purposes, the locking mechanism will not allow a complete removal of the unit at this stage.
   Pulling the Unit Outwards

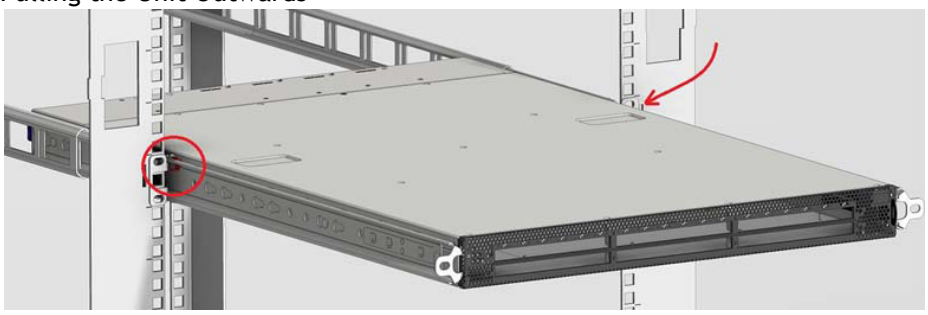

4. Press on the locking spring (appears in red in the figure below) on both sides simultaneously, and continue pulling the unit towards you until it is fully removed.
   Locking Mechanism



SN2740/SN2410 Static Rail Kit

> ⚠ By default, the system is sold with the standard-depth rail kit. The short-depth rail kit can be supplied upon request.

Kit Part Number	Legacy Kit Part Number	Rack Size and Rack Depth Range
930-9NRKT-00JE-000	MTEF-KIT-BP	Short: 19.7"-23.6" (50 to 60 cm)
930-9NRKT-00JV-000	MTEF-KIT-SP	Standard: 23.6"-31.5" (60 to 80 cm)

The following parts are included in the static rail kit (see figure below):

- 2x Rack mount rails (A)
- 2x Rack mount blades (B)
- 8x M6 Standard cage nuts[1] [2] and 8x M6 Standard pan-head Phillips screws[1] (C)
- 4x Phillips100 DEG F.H TYPE-I ST.ST 6-32 X 1/4 screw with around patch (D).

[1] Other threads are available by special order: M5, 10-32, 12-24. [2] G-type cage-nut is available by special order.

Rack Rail Kit Parts

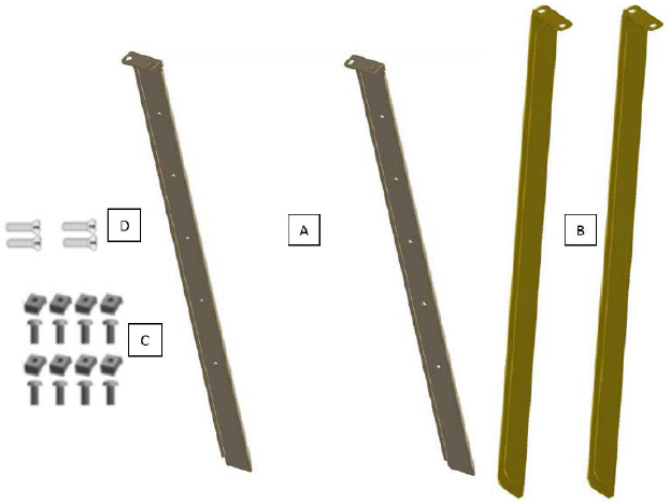

Prerequisites

Before mounting the system to the rack, select the way you wish to place the system. Pay attention to the airflow within the rack cooling, connector and cabling options.

While planning how to place the system, consider the two installation options shown in the Installation Options figure below, and review the following points:

- Make sure the system air flow is compatible with your installation selection. It is important to keep the airflow within the rack in the same direction.
- Note that the part of the system to which you choose to attach the rails (the front panel direction, as demonstrated in Option 1 or the FRUs direction, as demonstrated in Option 2) will determine the system's adjustable side. The system's part to which the blades are attached, will be adjacent to the cabinet.
- In case there are cables that cannot bend within the rack, or in case more space is needed for cable bending radius, it is possible to recess the connector side or the FRU side by 3.5" (8.9 cm), by optional placement of the system's rails.
- The FRU side is extractable. Mounting the rack blades inverted to the FRU side (Option 2) will allow you to slide the FRUs, in and out.

Installation Options

Option 1:

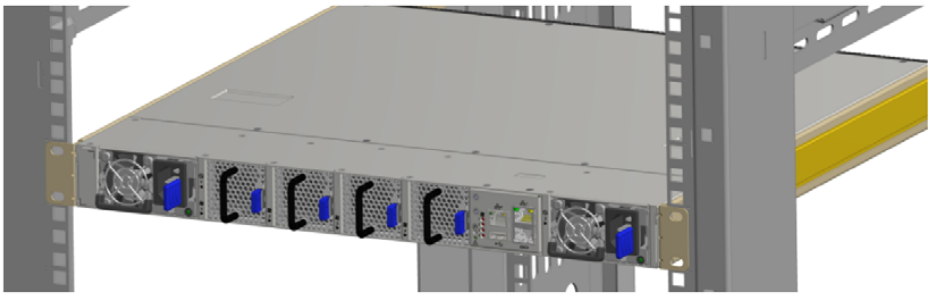

Option 2:

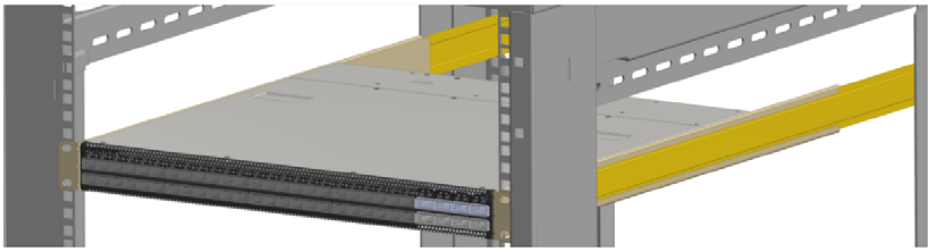

To mount the system into the rack:

> At least two people are required to safely mount the system in the rack.

1. Attach the left and right rack mount rails (A) to the switch, and secure the chassis in the rails by screwing 2 flat head Phillips screws (D) in the designated points on each side (a total of 4 screws). To tighten the screws, use a torque of 1.5±0.2 Nm.
   Attaching the Rails to the Chassis

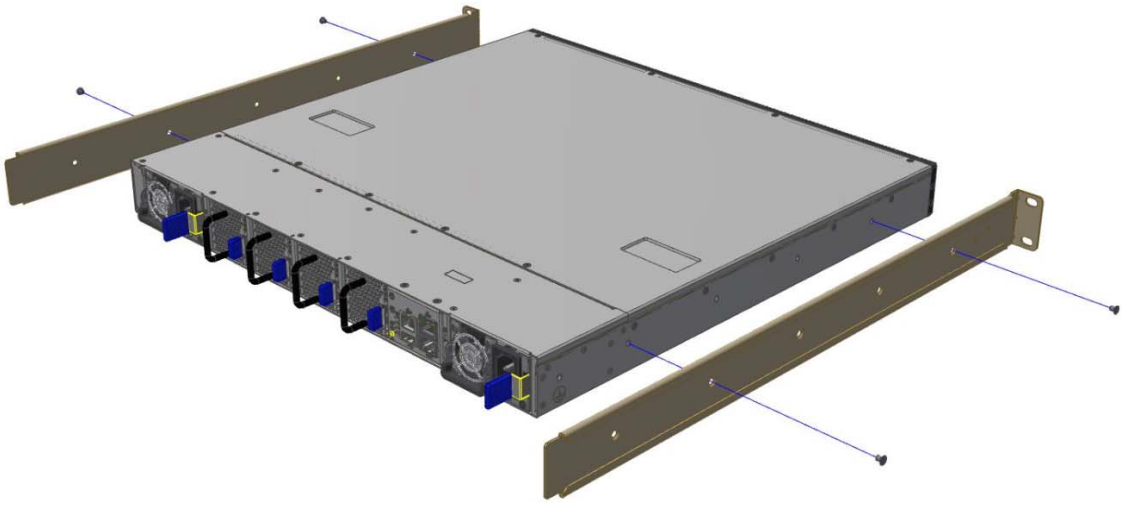

2. Install 8 cage nuts (C) in the desired slots of the rack: 4 cage nuts in the non-extractable side and 4 cage nuts in the extractable side. Note that while each rack U (unit) consists of three holes, the cage nut should be installed vertically with its ears engaging the top and bottom holes only.
   Installing the Cage Nuts



While your installation partner is supporting the system's weight, perform steps 3, 4 and 5:

3. On the rear side of the cabinet, install the two blades (B) in the selected rack unit, using four M6 screws (C). Do not tighten the screws yet.
   Attaching the Rails to the Rack
   
4. Slide the two blades into the left and right rails, and adjust them to fit your rack's depth. Use four M6 screws (D) to fix the blades into the rack. Do not tighten the screws yet.
   Sliding the Blades in the Rails
   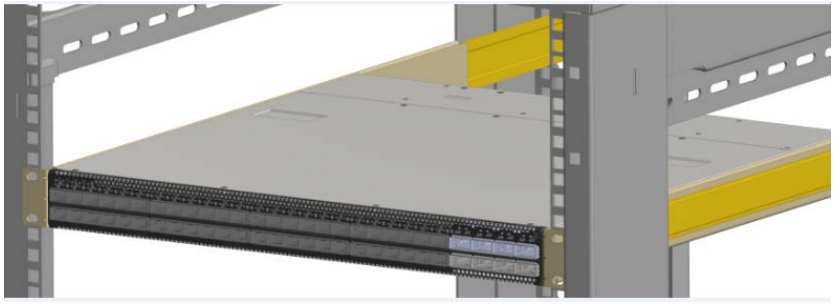
5. Secure the system in the rack by tightening the 8 screws inserted in Step 3 and Step 4 with a torque of 4.5±0.5 Nm.

SN2100/SN2010 Side by Side Mounting Rail Kit

⚠ The installation process is demonstrated on an SN2100 system, but applies to the SN2010 series as well.
A designated rail kit for the SN2100/SN2010 systems can be purchased separately.
This section is relevant to short-depth systems that allow such a form of installation only.

Kit Part Number	Kit Legacy Part Number	Rack Size and Rack Depth Range
930-9NRKT-00JG-000	MTEF-KIT-D	Rack installation kit for SN2100/SN2010 series short depth 1U switches, allows installation of one or two switches side-by-side into standard depth racks.

The following parts are included in the rail kit (see figure below):

- 1 metal frame for two systems (A)
- 2 system mounting blades with 8 screw holes - the kit contains enough rails to install 2 systems (B)
- 2 system mounting blades with 7 screw holes - the kit contains enough rails to install 2 systems (C)
- 2 blank (installed) covers (D)
- 30 flat head 4-40 screws - the kit contains enough screws to install 2 systems (E)
- 2 frame rail slides (F)
- 10 (+2 spare units) M6 pan head screws (G)
- 10 (+2 spare units) M6 spring washers (H)
- 10 (+2 spare units) M6 spring steel cage nuts (I)
- 6 (+2 spare units) cable-ties (J)

Rack Rail Kit Parts

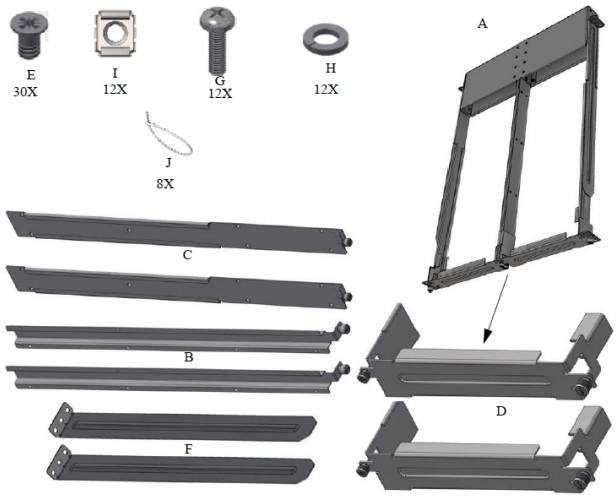

Prerequisites

Before mounting the system to the rack, select the way you wish to place the system. Pay attention to the airflow within the rack cooling, connector and cabling options.

- The installation kits come with enough system mounted rails and flat head screws to install two systems.
- The 2 system metal frame will fit into racks with from 23.6” (600mm) to 31.5” (800mm) space between the vertical supports.
- You may choose to install your system in the right or in the left part of the metal frame. The following instructions apply to installation in the right part. For installation in the frame’s left part, follow the same instructions, while replacing “right” with “left”, and vice versa.

To mount the system into the rack:

At least two people are required to safely mount the system in the rack.

1. Insert the SE (single ended) plugs to the dedicated inlets in the system's rear panel.
2. Carefully position the SE (single ended) cables one on top of the other, and use three cable ties to pair them together (shown in figure).

   While pairing the cables, make sure the cables are paired in symmetry to the switch, in order to avoid damaging the cables.

   Coupling the Cables with Cable-ties

   

   Coupled Cables - Rear View

   

3. Place the coupled cables in the designated area within the right flat blade (the blade with 7 screw holes).

   Cables within the Rail

   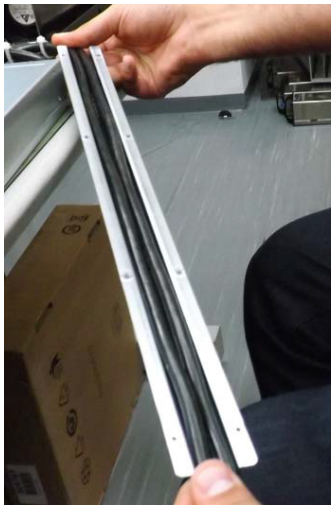

   In the next step you will be attaching the mounting rails to the switch sides. Before doing that, make sure the cables are laid properly within them. Avoid using excessive pressure, as it can damage the cables.

4. While holding the cables stably together in the blade's rail with one hand, use your other hand to secure the blades to the chassis. Screw the right blade with eight 4-40 flathead screws, and the left blade with seven 4-40 flathead screws. The recommended torque is 0.49-0.54 Nm.

   Attach the Blades to the System

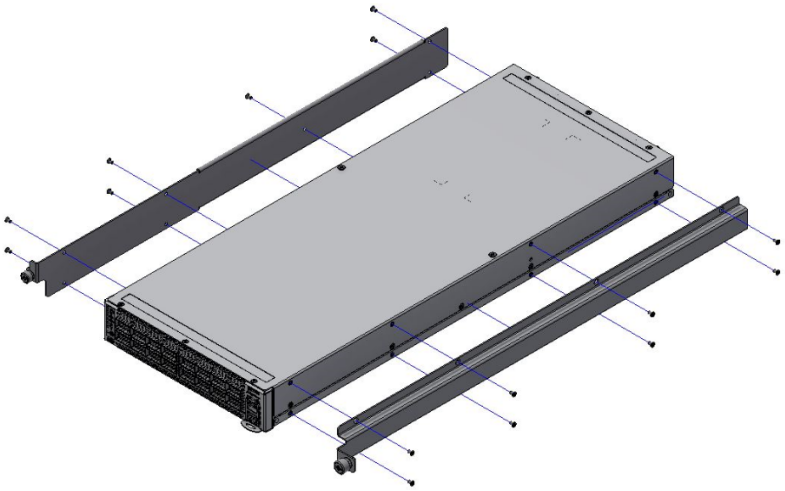

Attached Rail with Threaded Cables - Top View



5. Slide the two frame slides into the dedicated rails in the metal frame.
   Sliding the Frame Sliders into the Rails

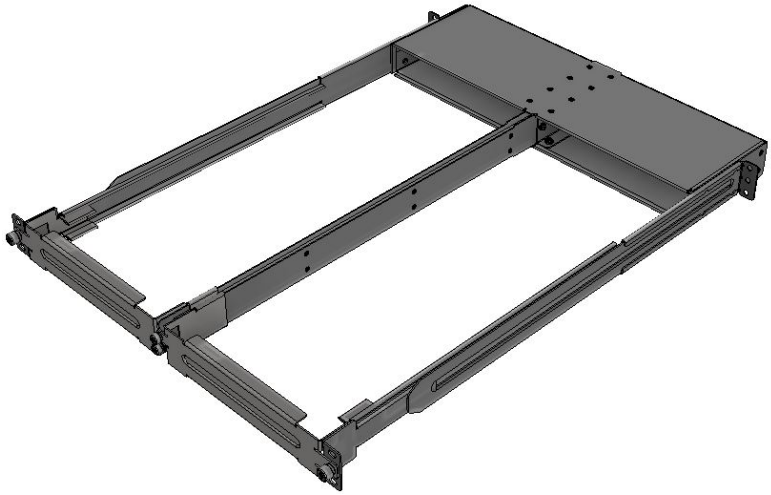

6. Step 6. Install ten cage nuts in the desired slots of the rack: three cage nuts in the front part of each cabinet post, and two cage nuts in the rear part of each cabinet post.
   Installing the Cage Nuts



7. Attach the frame to the rack by using ten spacer cage nuts, and screw ten M6 pan head screws - four in the front part of the rack, and 6 in its rear part. The recommended torque is 6.55-7.35 Nm. See figure above.
8. Place the frame in the cabinet.
   Attaching the Frame to the Rack

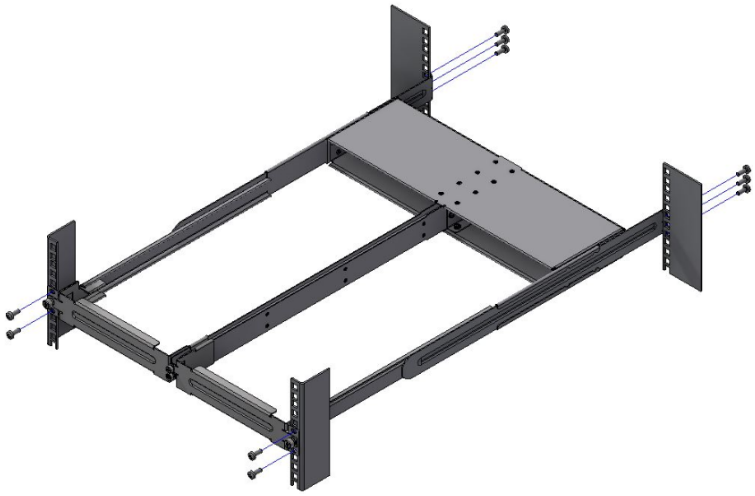

> Do not remove both of the blank covers at the same time. When no system is installed, at least one of them should be present to support the frame's partition.

9. Remove the blank cover from the selected slot in the frame, and mount the system by sliding its mounting blades into the frame. Repeat this step to install an additional system in the other side of the frame, if needed.
10. Tighten the capture nuts to secure the system in the frame. The recommended torque on the right screw is 3.0-3.36 Nm while on the left screw recommended torque is 0.89-0.98 Nm.
    Sliding the System's Blades in the Rails

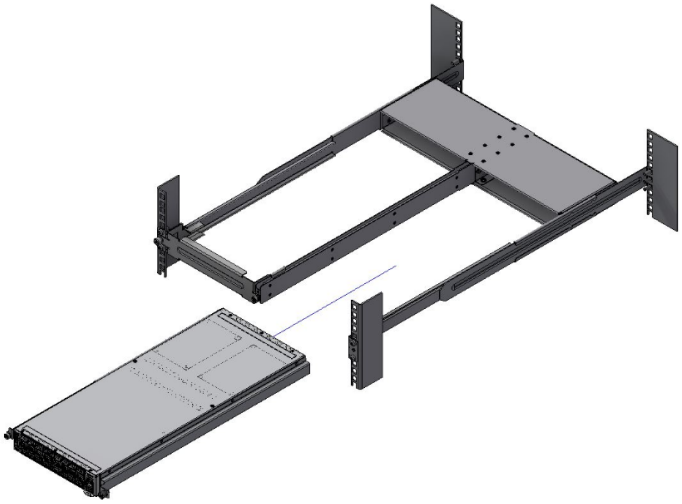

SN2100/SN2010 Static Single Switch Rail Kit

> ⚠ The installation process is demonstrated on an SN2100 system, but applies to the SN2010 series as well.
> This rail kit is not included with the SN2100/SN2010 systems, and can be purchased separately.
> This section is relevant to short-depth systems that allow such form of installation only.

Kit Part Number	Kit Legacy Part Number	Rack Size and Rack Depth Range
930-9BRKT-00JI-000	MTEF-KIT-E	Rack installation static kit for SN2100/SN2010 systems short depth 1U half-width switches, allows installation of a single switch into standard depth racks.

The following parts are included in the rail kit (see figure below):

- 16 flat head 4-40 screws (A)
- 8 M6 spring steel cage nuts (B)
- 8 M6 pan head screws (C)
- 8 M6 spring washers (D)
- 8 M6 flat washers (E)
- 2 rack mount blades (F)
- 2 system brackets (G)

Rack Rail Kit Parts

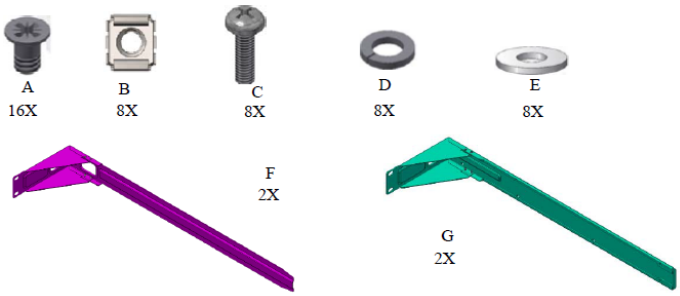

To mount the system into the rack:

> At least two people are required to safely mount the system in the rack.

1. Attach the 2 system rails to the system's sides using 8 flat head 4-40 screws (A) in each side.
   Attaching the Brackets to the System's Sides

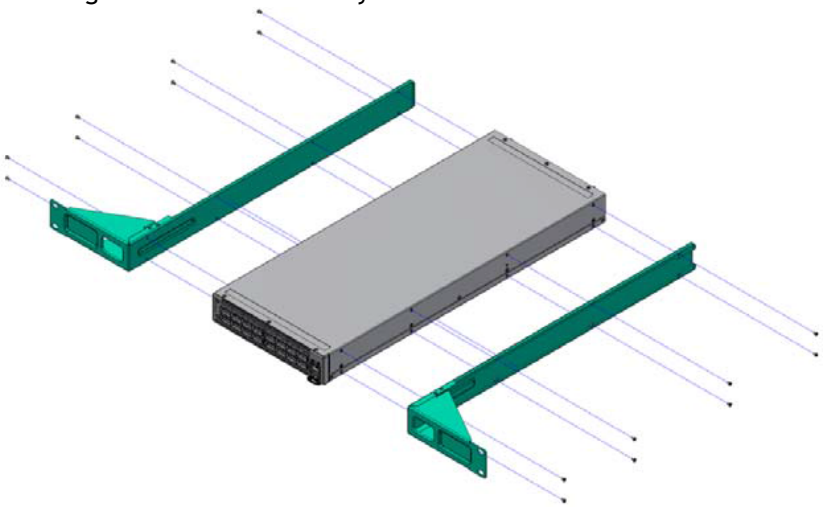

2. Install 8 cage nuts of the relevant type - square or round holes, according to your rack type.
   Installing the Cage Nuts



   While your installation partner is supporting the system's weight, perform steps 3 and 4:

3. On the rear side of the cabinet, install the two blades (F) in the selected rack unit, using four M6 screws and washers (C+D+E). Do not tighten the screws yet.

Attaching the Blades to the Rack

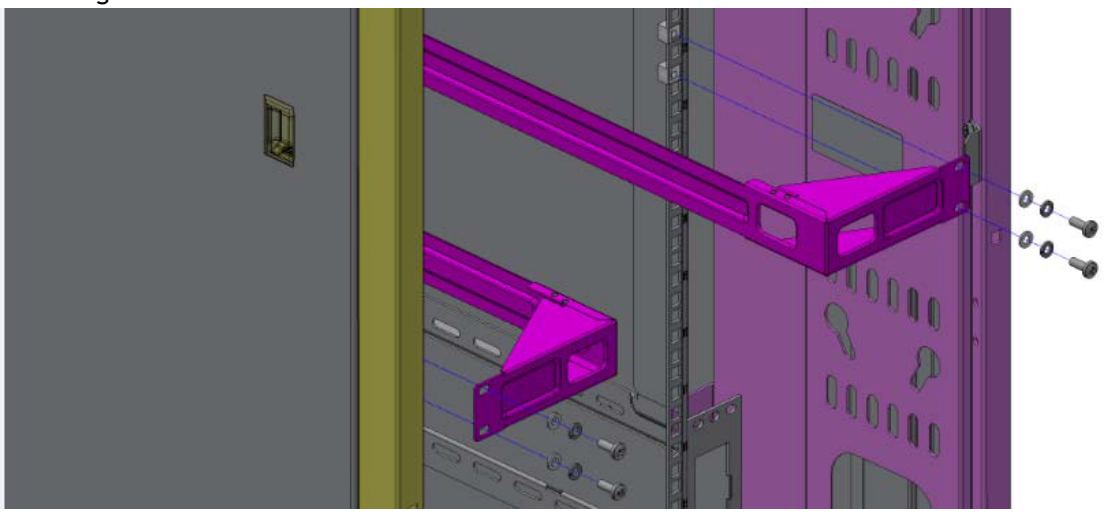

4. Mount the system into the rack enclosure by sliding the rails in the rack. Secure the brackets to the rack's posts by inserting four M6 screws and washers (C+D+E) in the designated cage nuts - 2 in each side. Tighten all screws.

   Attaching the Brackets to the Rack

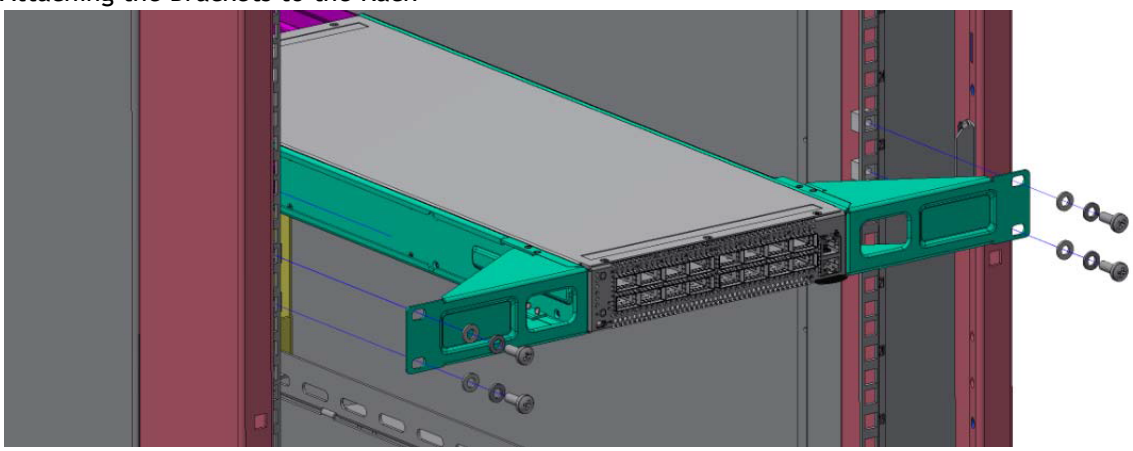

SN2201 Tool-Less Rail Kit

Tool-Less 4-Post Mounting Rail-Kit

Kit Part Number	Kit Legacy Part Number	Rack Size and Rack Depth Range
930-9NRKT-00JS-000	MTEF-KIT-M-TL	NVIDIA Tool-less rack installation kit, 4-post rack, for SN2201 switch

The following parts are included in the tool-less rail kit (see figure below):

- 2x Rack mount rails (A)
- 2x Rack mount blades (B)
- 2x Inner rails (C)

Rail-Kit Parts

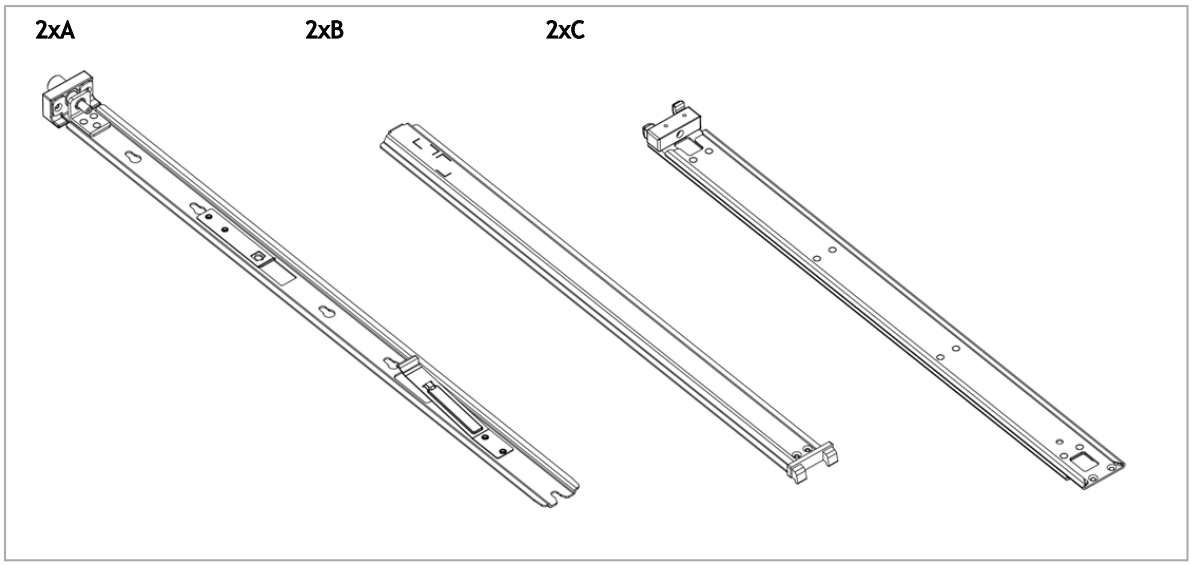

Prerequisites:

- At least two people are required to safely mount the system in the rack.
- All servers and systems in the rack should be planned with the same airflow direction. All FRU components must have the same airflow direction. A mismatch in the airflow will affect the heat dissipation.
- The part of the system to which you choose to attach the rails will determine the system's adjustable side. The system's part to which the brackets are attached will be adjacent to the cabinet.
- The FRU side is extractable. Mounting the rack brackets inverted to the FRU side will allow you to slide the FRUs, in and out.

Installation

1. Extract the inner rails (A) from the other rails by pressing the spring latch and pulling it out, as shown in the following illustration:

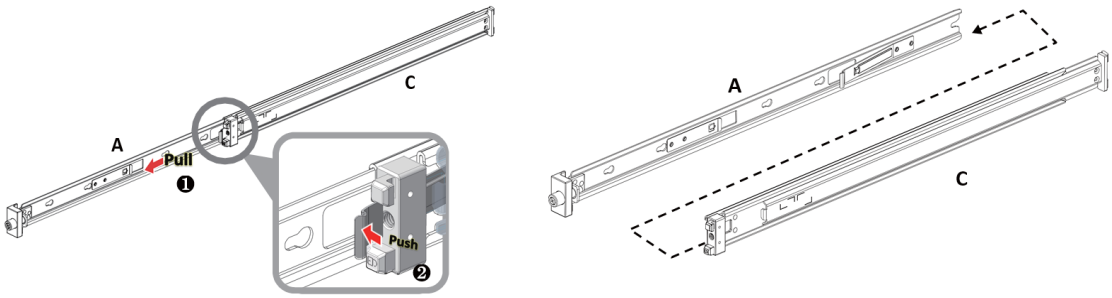

2. Mount the inner rails (A) onto the chassis:
    a. Attach the switch to the left and right inner rails according to your installation selection -

- Standard Installation:

The inner rails should be assembled to the switch using the first five holes (from its front side).

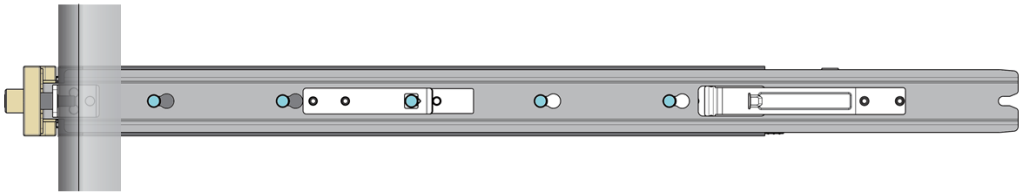

- Recessed Installation:

The inner rails should be assembled to the switch skipping the first hole (from its front side).

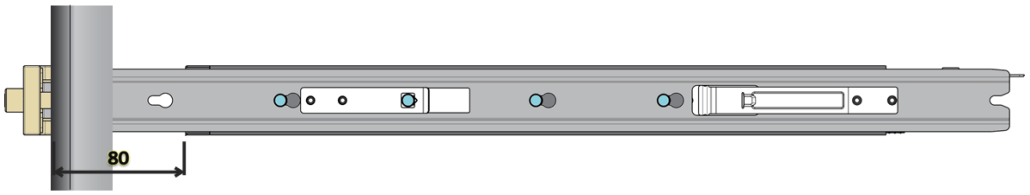

b. Secure the assembly by pushing the chassis' pins through the slider key holes, until a click is heard and locking occurs.

3.

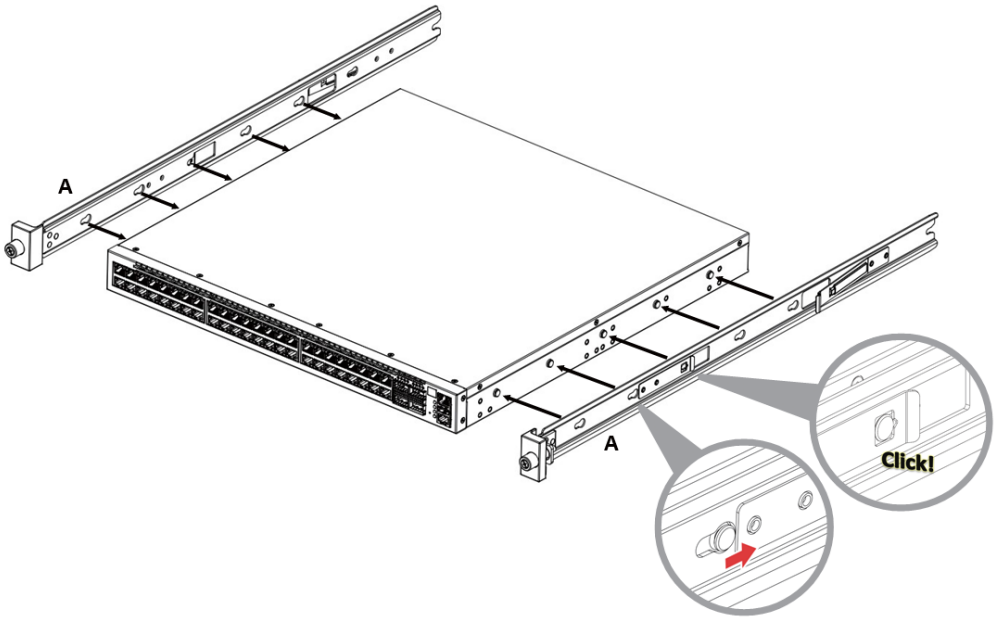

4. Install the outer rails (B+C) in the rack, as shown in the following illustration:

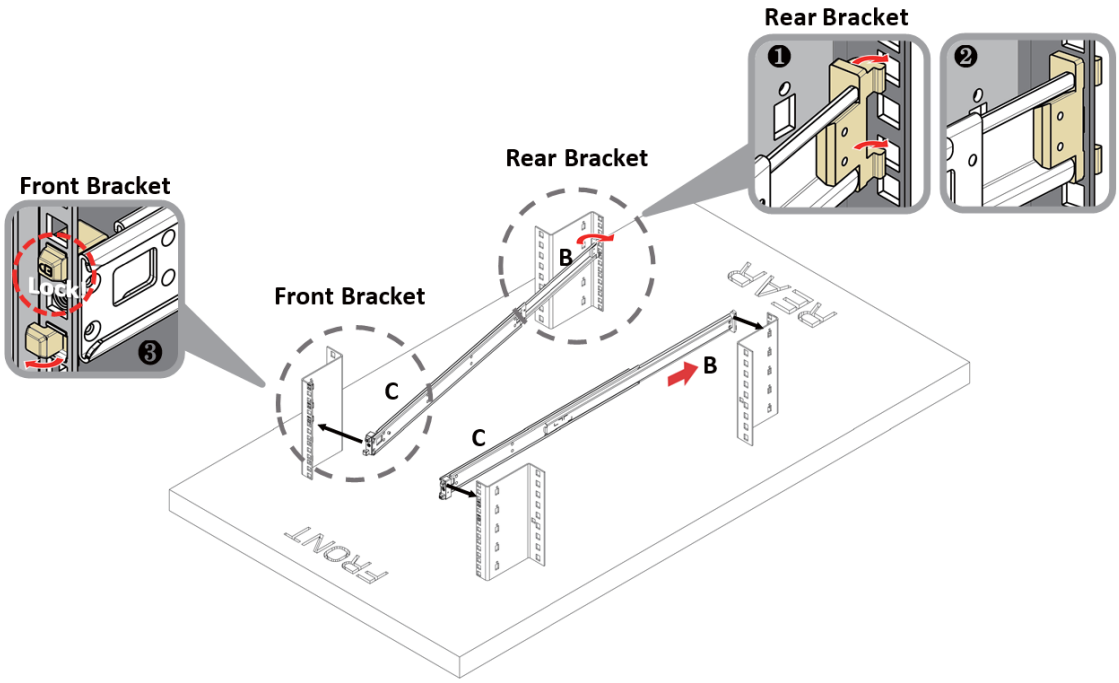

5. Mount the chassis onto the rack:
   a. Insert the chassis into the middle-outer rails installed in the rack (C).

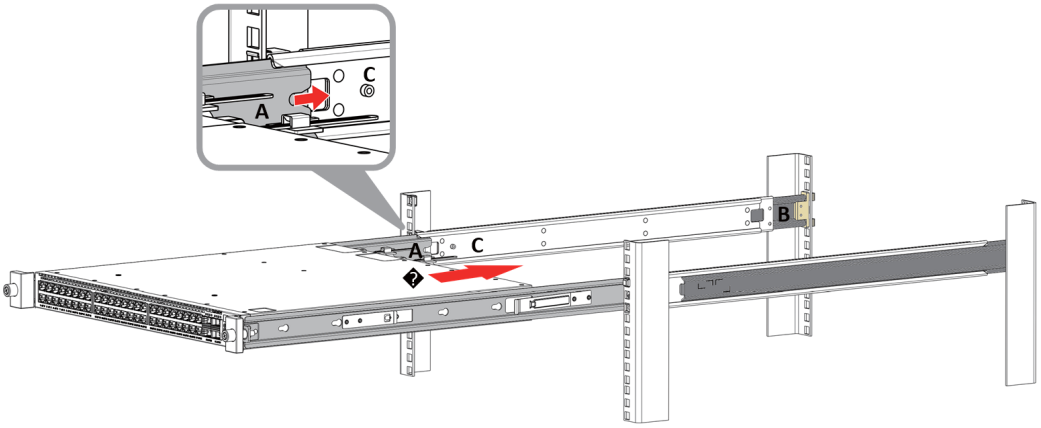

   b. Secure the chassis in place by tightening the thumb-screws.

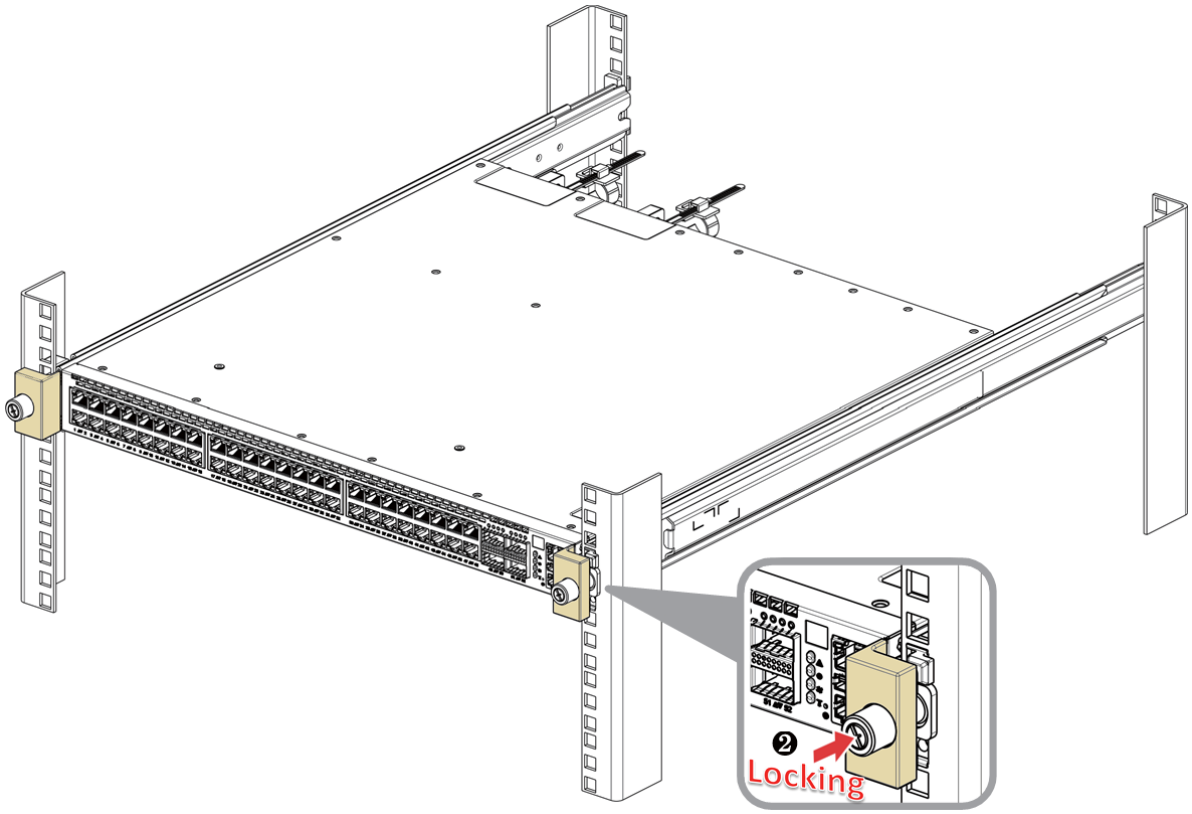

Tool-Less 2-Post Mounting Rail-Kit

> ⚠ This mounting kit is optional and should be ordered separately.

Kit Part Number	Legacy Kit Part Number	Rack Size and Rack Depth Range
930-9NRKT-00JR-000	MTEF-KIT-M	NVIDIA fixed installation kit, 2-post rack, for SN2201 switch

The following parts are included in the 2-post mounting rail kit (see figure below):

- 2x Rack mount brackets (A)
- 12x M4 screws (B)
- 2x cage nuts (C)
- 4x 10-32 screws (D)

Rail-Kit Parts

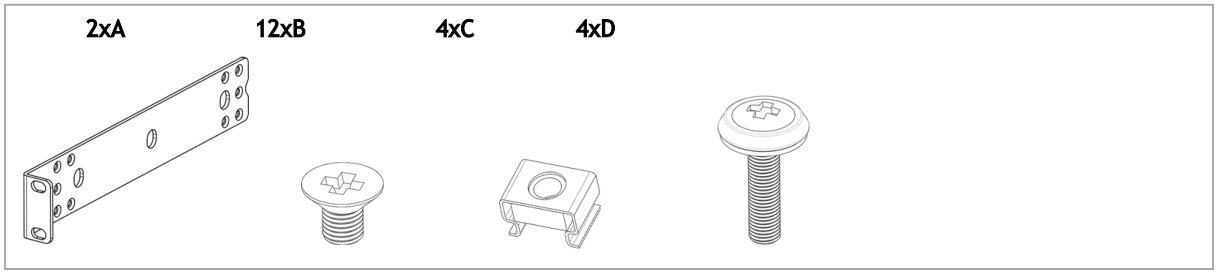

- Standard Installation:

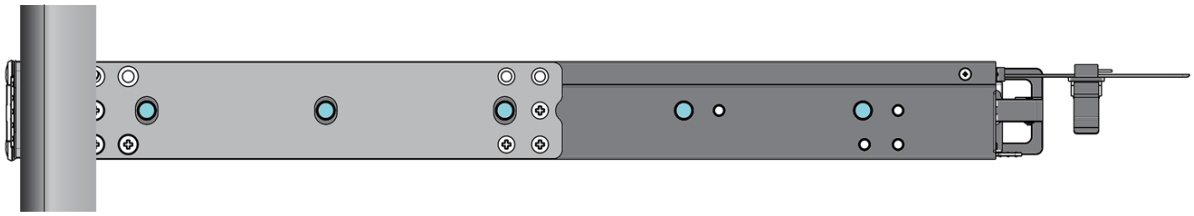

- Middle rack Installation:

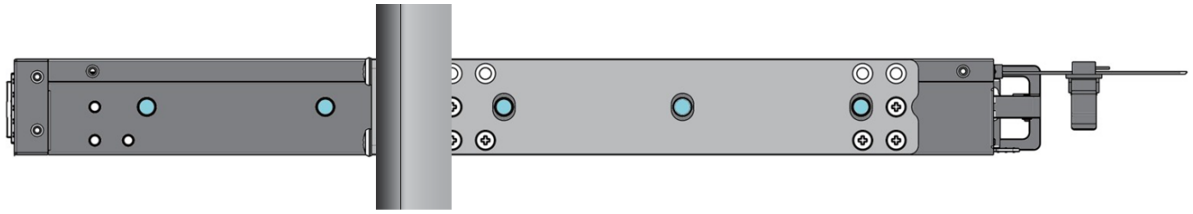

1. Attach the two brackets (A) to the chassis, using the 12 M4 screws (B) provided in the kit.

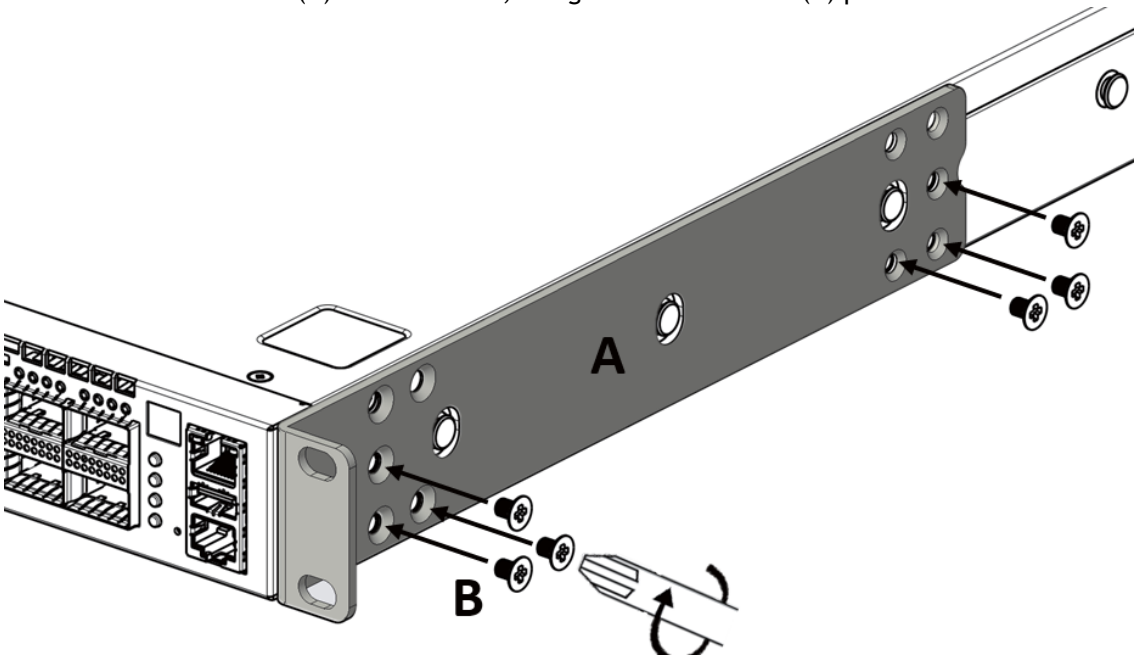

2. Install 4 cage nuts (C) in the desired 1U slots of the rack, and mount the device in the rack, using 10-32 rack mounting screws.

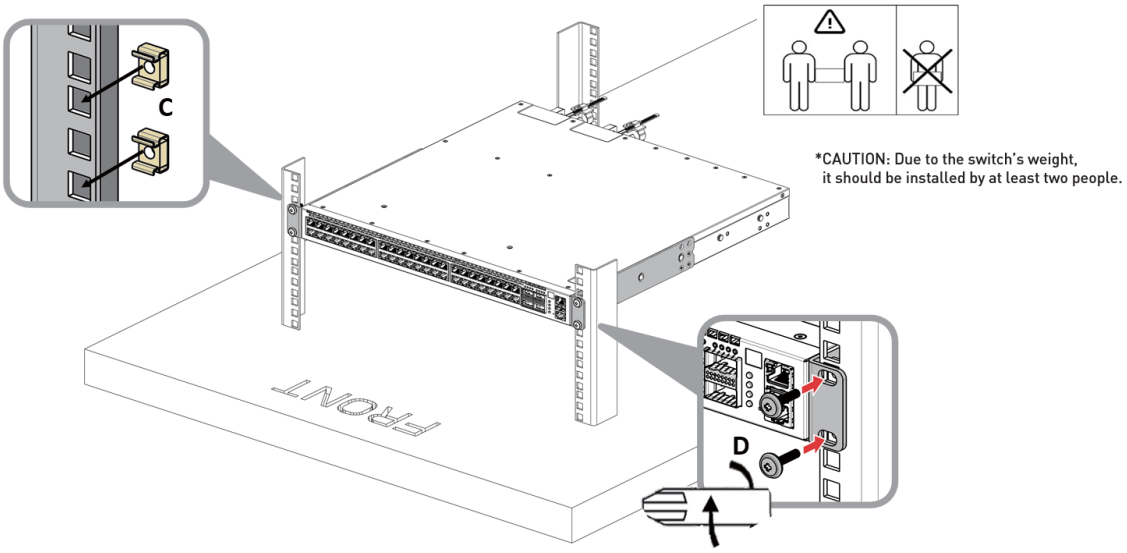

> ⚠ The 2-post mounting installation may cause sinking of the switch. The rear end sag is 6-8mm.

3. The cable retainer should be used to secure the cable when installing the system. To secure the power cord inside the retainer, press the small tab on the retainer strip to loosen the loop.

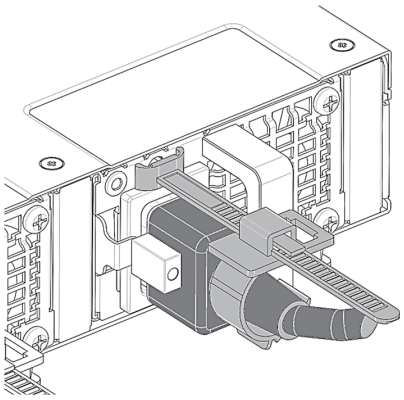

Cable Installation

All cables can be inserted or removed with the unit powered on.
To insert a cable, press the connector into the port receptacle until the connector is firmly seated. The LED indicator, corresponding to each data port, will light when the physical connection is established. When a logical connection is made, the relevant port LED will turn on.
To remove a cable, disengage the locks and slowly pull the connector away from the port receptacle. The LED indicator for that port will turn off when the cable is unseated.
For full cabling guidelines, ask your NVIDIA representative for a copy of *NVIDIA Cable Management Guidelines and FAQs Application Note*.
For more information about port LEDs, refer to Port LEDs.

Do not force the cable into the cage with more than 40 newtons/9.0 pounds/4kg force. Greater insertion force may cause damage to the cable or to the cage.

QSFP Cable Orientation

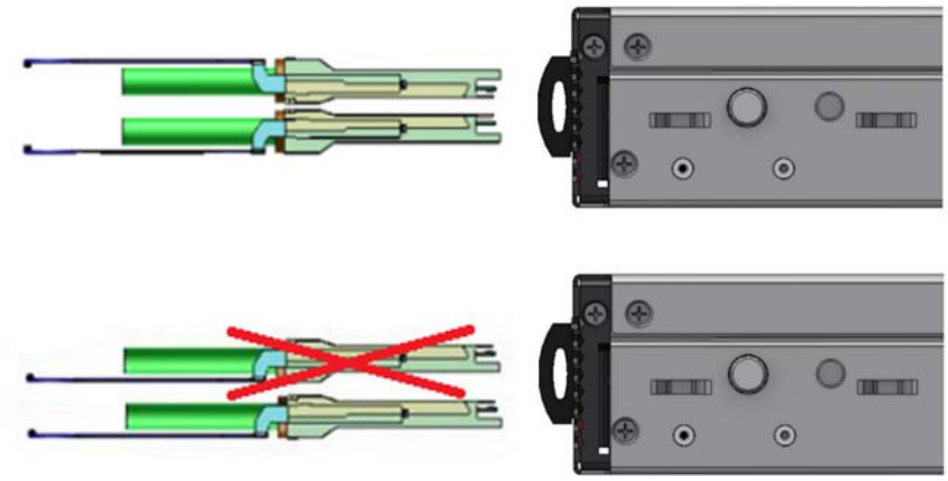

SN2010 SFP Cable Orientation

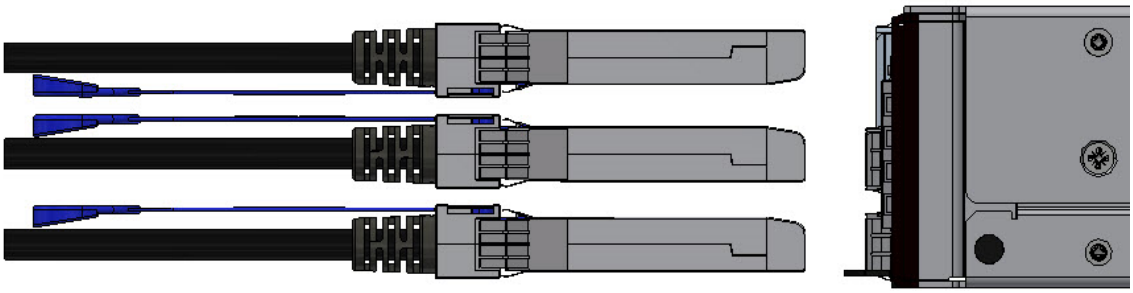

SN2740 Cable Orientation

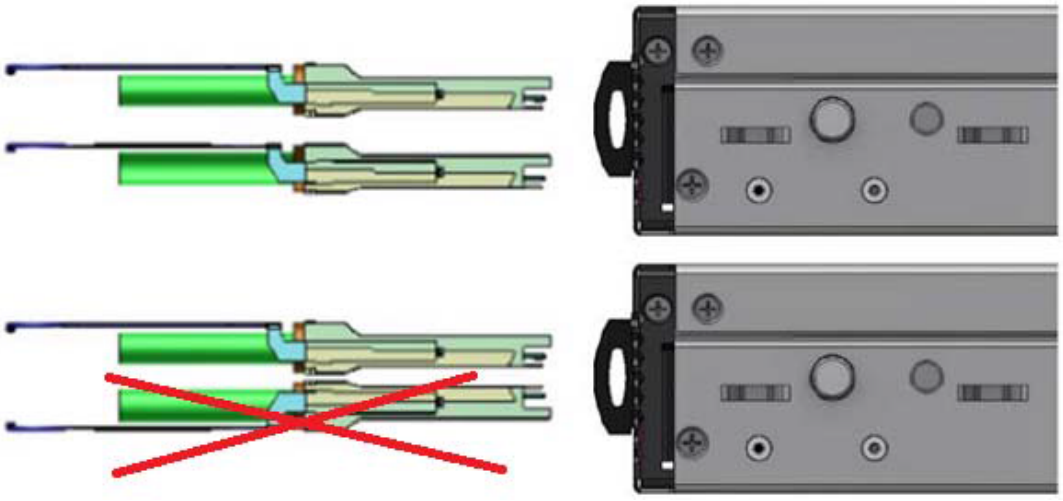

SN2410 Cable Orientation



The SN2410 system includes ports of different types. The figure above does not apply to the SFP28 ports; see "SN2410 Splitting Options" below.

Splitter (Breakout) Cables and Adapters

A 100GbE port can be split to two 50GbE ports, or to four (or less) 25GbE ports, using an NVIDIA splitter cable.
Splitting a 100GbE QSFP28 port to 4 separate 25GbE ports (using a splitter cable) may disable (unmap) the 100GbE port below it. See specific splitting options per system detailed below.

Using Splitter (Breakout) Cables with NVIDIA Onyx (MLNX-OS)

When using this feature, you should log into the NVIDIA Onyx (MLNX-OS) CLI and configure the individual ports to be ‘split-2’ or ‘split-4’. For further information on NVIDIA’s cable, visit http://www.mellanox.com/page/interconnect_overview.

Using Splitter (Breakout) Cables with Cumulus Linux

If you are using 4x10G direct attach copper cables or active optical cables, edit the /etc/cumulus/ports.conf to enable support for these cables, then restart the switchd service using the sudo systemctl restart switchd command. For more details, see Layer 1 and Switch Port Attributes in the Cumulus Linux User Guide.
Examples of Splitter (Breakout or Fanout) Cables



SN2700 and SN2740 Splitting Options

The top QSFP28 ports marked in green are splittable to 4 SFP28 ports, each.
The bottom QSFP28 ports (gray) are blocked when the upper ports are in split mode.
All QSFP28 ports can be split to 2 QSFP28 ports.



SN2410 Splitting Options

The top QSFP28 ports – 49, 51, 53, 55 (green) – are splittable to 4 SFP28 ports each.
The bottom QSFP28 ports – 50, 52, 54, 56 (gray) – are blocked when the upper ports are in 4 SFP28 split mode.
All QSFP28 ports can be split into two QSFP28 ports.

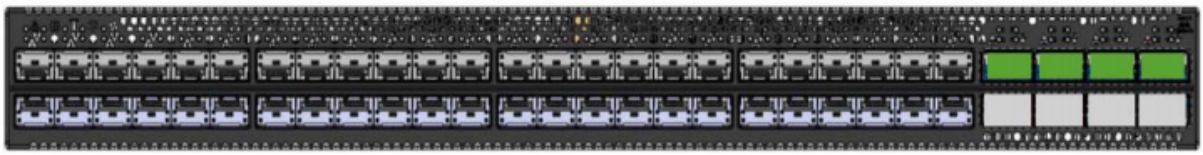

SN2100 Splitting Options

All QSFP28 ports are splittable. Each port can be split into 4xSFP28 (10/25G) or 2xQSFP28 (50G) ports. There are no blocking requirements.

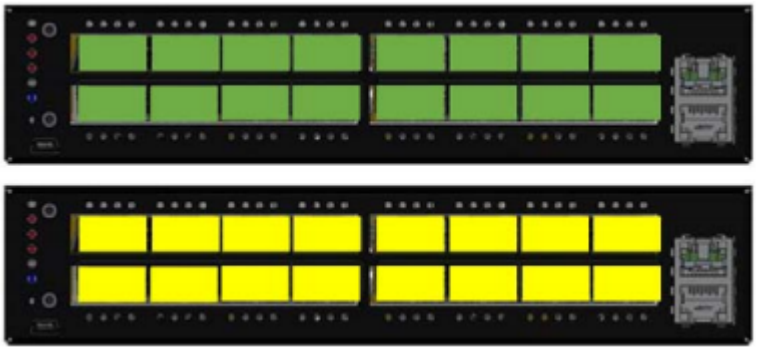

SN2010 Splitting Options

All QSFP28 ports are splittable. Each port can be split into 4xSFP28 (10/25G) or 2xQSFP28 (50G) ports. There are no blocking requirements.



SN2201 Splitting Options

All QSFP28 ports are splittable. Each port can be split into 4xSFP28 (10/25G) or 2xQSFP28 (50G) ports. There are no blocking requirements.



Initial Power On

Each system's input voltage is specified in the .Specifications vAdding_SN2201 chapter.
The power cords should be standard 3-wire AC power cords including a safety ground and rated for 15A or higher.

> The system platform will automatically power on when AC power is applied. There is no power system. Check all boards, power supplies, and fan tray modules for proper insertion before plugging in a power cable.

1. Plug in the first power cable.
2. Plug in the second power cable.
3. Wait for the System Status LED to turn green.

   > It may take up to five minutes to turn on the system. If the System Status LED shows amber after five minutes, unplug the system and call your NVIDIA representative for assistance.

4. Check the System Status LEDs and confirm that all of the LEDs show status lights consistent with normal operation (initially flashing, and then moving to a steady color) as shown in the figures below. For more information, refer to .LED Notifications vAdding_SN2201.

System Status LEDs* 5 Minutes After Power On
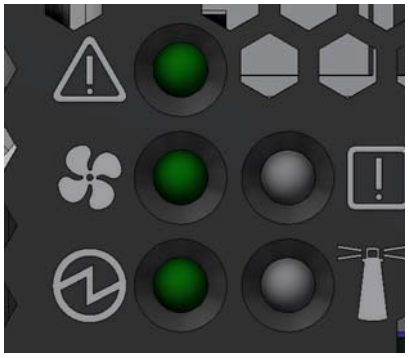 *The icons order and style may vary depending on the system. *The SN2100 and SN2010 systems have two PSU System Status LEDs each. *The Bad Port LED ( ) exists in SN2700 and SN2410 only.

After inserting a power cable and confirming the green System Status LED light is on, make sure that the Fan Status LED shows green. If the Fan Status LED is not green, unplug the power connection and check that the fan module is inserted properly and that the mating connector of the fan unit is free of any dirt and/or obstacles. If no obstacles were found and the problem persists, call your NVIDIA representative for assistance.

Two Power Inlets - Electric Caution Notifications:

- Risk of electric shock and energy hazard. The two power supply units are independent. Disconnect all power supplies to ensure a powered down state inside of the switch platform.
- ACHTUNG Gafahr des elektrischen Schocks. Entferrnen des Netzsteckers elnes Netzteils spannungsfrei. Um alle Einhieten spannungsfrei zu machen sind die Netzstecker aller Netzteile zu entfernen.
- ATTENTION Risque de choc et de danger e'lectriques. Le de'branchment d'une seule alimentation stabilise'e ne de'branch uniquement qu'un module "Alimentation Stabilise'e". Pour isoler completement le module en cause, Il faut de'brancher toutes les alimentations stabilise'es.

System Bring-Up

For bring-up of a switch system with NVIDIA Onyx (MLNX-OS) operating system installed, see Configuring Network Attributes Using NVIDIA Onyx (MLNX-OS).
For bring-up of a switch system with Cumulus Linux operating system installed, see Configuring Network Attributes Using Cumulus Linux.

Configuring Network Attributes Using NVIDIA Onyx (MLNX-OS)

The procedures described in this chapter assume that you have already installed and powered on the system according to the instructions in this document. The system comes with a pre-configured

DHCP. If you wish to disable it, refer to Disable Dynamic Host Configuration Protocol (DHCP). In case a manual configuration is required, please refer to the instructions in Manual Host Configuration.

Manual Host Configuration

To perform initial configuration of the system:

Step 1. Connect a host PC to the Console RJ45 (IOIOI) port of the system, using the supplied harness cable (DB9 to RJ45). Make sure to connect to the Console RJ45 port and not to the (Ethernet) MGT () port.

Step 2. Configure a serial terminal program (for example, HyperTerminal, minicom, or Tera Term) on your host PC with the settings described in the table below. Once you perform that, you should get the CLI prompt of the system.

Serial Terminal Program Configuration

Parameter	Setting
Baud Rate	115200
Data bits	8
Stop bits	1
Parity	None
Flow Control	None

Step 3. Login as admin and use admin as password. On the first login, the NVIDIA Onyx (MLNX-OS) configuration wizard will start.

Step 4. To configure network attributes and other initial parameters to the system, follow the configuration wizard as shown in the Configuration Wizard Session table below.

Configuration Wizard Session

Wizard Session Display	Comments
NVIDIA configuration wizard Do you want to use the wizard for initial configuration? yes	You must perform this configuration the first time you operate the system or after resetting the system. Type ‘y’ and then press <Enter>.
Step 1: Hostname? [switch-1]	If you wish to accept the default hostname, press <Enter>. Otherwise, type a different hostname and press <Enter>.
Step 2: Use DHCP on mgmt0 interface? [no] yes	Perform this step to obtain an IP address for the system. (mgmt0 is the management port of the system). If you wish the DHCP server to assign the IP address, type ‘yes’ and press <Enter>. If you type ‘no’ (no DHCP), then you will be asked whether you wish to use the ‘zeroconf’ configuration or not. If you enter ‘no’ (no Zeroconf), you must enter a static IP, and the session will continue.
Step 3: Enable IPv6? [yes]	The management interface will be able to use IPv6 addresses. If you enter "no" (no IPv6), you will automatically be referred to Step 6.

Wizard Session Display	Comments
Step 4: Enable IPv6 auto-config (SLAAC) on mgmt0 interface? [no]	This turns on auto-configuration of the IPv6 addresses. This is unsuitable for DHCPv6.
Step 5: Enable DHCPv6 on mgmt0 interface? [no]	To enable DHCPv6 on the MGMT0 interface.
Step 6: Admin password (Press <Enter> to leave unchanged)? <new_password> Step 6: Confirm admin password? <new_password>	To avoid illegal access to the machine, please type a password and then press <Enter>. Then confirm the password by re-entering it. Note that password characters are not printed.
You have entered the following information: <A summary of the configuration is now displayed.> To change an answer, enter the step number to return to or hit <enter> to save changes and exit. Choice: <Enter> Configuration changes saved.	The wizard displays a summary of your choices and then asks you to confirm the choices or to re-edit them. Either press <Enter> to save changes and exit, or enter the configuration step number that you wish to return to. *Note: To re-run the configuration wizard, run the command "configuration jump-start" in Config mode.*

The table below shows an example of static IP configuration for mgmt0 interface.

Configuration Wizard Session - Static IP Configuration

```
Mellanox configuration wizard

Do you want to use the wizard for initial configuration? yes

Step 1: Hostname? []
Step 2: Use DHCP on mgmt0 interface? [yes] no
Step 3: Use zeroconf on mgmt0 interface? [no]
Step 4: Primary IP address? [for example 192.168.10.4] 10.10.10.10
Mask length may not be zero if address is not zero (interface eth0)
Step 5: Netmask? [0.0.0.0] 255.255.255.0
Step 6: Default gateway? [for example 192.168.10.1] 10.10.10.255
Step 7: Primary DNS server?
Step 8: Domain name?
Step 9: Enable IPv6? [yes]
Step 10: Enable IPv6 autoconfig (SLAAC) on mgmt0 interface? [no]
Step 11: Admin password (Enter to leave unchanged)?

To change an answer, enter the step number to return to.
Otherwise hit <enter> to save changes and exit.
Choice:
Configuration changes saved.

To return to the wizard from the CLI, enter the "configuration jump-start"
command from configure mode. Launching CLI...
```

Step 5. Before attempting a remote (for example, SSH) connection to the system, check the mgmt0 interface configuration. Specifically, verify the existence of an IP address. To check the current mgmt0 configuration, enter the following command:

```
switch01 (config) # show interfaces mgmt0
Interface mgmt0 status:
  Comment:
  Admin up:           yes
  Link up:            yes
  DHCP running:       yes
  IP address:         192.168.1.100
  Netmask:            255.255.255.0
  IPv6 enabled:       yes
  Autoconf enabled:   no
  Autoconf route:     yes
  Autoconf privacy:   no
  DHCPv6 running:     no
  IPv6 addresses:     1
  IPv6 address:       fe80::202:c9ff:fe63:b55a/64
  Speed:              1000Mb/s (auto)
  Duplex:             full (auto)
  Interface type:     ethernet
  Interface source:   physical
  MTU:                1500
  HW address:         00:02:C9:63:B5:5A

  RX bytes:           968810197      TX bytes:        1172590194
```

```
    RX packets:        10982099       TX packets:      10921755
    RX mcast packets:  0              TX discards:     0
    RX discards:       0              TX errors:       0
    RX errors:         0              TX overruns:     0
    RX overruns:       0              TX carrier:      0
    RX frame:          0              TX collisions:   0
                                      TX queue len:      1000

switch01 (config) #
```

Step 6. Check the software version embedded in your system, using the command 'show version'. Compare this version to the latest version that can be retrieved from NVIDIA support site. To upgrade software, please refer to the *NVIDIA Onyx (MLNX-OS) User Manual*.

Disable Dynamic Host Configuration Protocol (DHCP)

DHCP is used for automatic retrieval of management IP addresses.
If a user connects through SSH, runs the wizard and turns off DHCP, the connection is immediately terminated, as the management interface loses its IP address. In such a case, the serial connection should be used.



<localhost># ssh admin@<ip-address>

```
Mellanox Onyx (MLNX-OS) Switch Management
Password:
Mellanox Switch
Mellanox configuration wizard
Do you want to use the wizard for initial configuration? yes
Step 1: Hostname? [my-switch]
Step 2: Use DHCP on mgmt0 interface? [yes] no
<localhost>#
```

Remote Connection with NVIDIA Onyx (MLNX-OS)

Once the network attributes are set, you can access the CLI via SSH or the WebUI via HTTP/ HTTPs.
To access the CLI, perform the following steps:

1. Set up an Ethernet connection between the system and a local network machine using a standard RJ45 connector.
2. Start a remote secured shell (SSH) using the command: ssh -l <username> <IP_address>

```
# ssh -l <username> <ip_address>
Mellanox Onyx (MLNX-OS) Switch Management

Password:
```

3. Login as admin (default username is *admin*, password is *admin*).
4. Once you get the CLI prompt, you are ready to use the system.

For additional information about NVIDIA Onyx (MLNX-OS), refer to the *NVIDIA Onyx (MLNX-OS) User Manual* located on the NVIDIA Networking Documentation Website.

Configuring Network Attributes Using Cumulus Linux

For Cumulus Linux initial configuration instructions, see Configuring Cumulus Linux in the Cumulus Linux Quick Start Guide.

Remote Connection with Cumulus Linux

Cumulus Linux uses the OpenSSH package to provide SSH functionality. To securely access a Cumulus Linux switch remotely, please follow the instructions on the "SSH for Remote Access" page in the Cumulus Linux User Guide.

FRU Replacements

> The following information does not apply to the SN2100/SN2010 series. The SN2100/SN2010 systems include two non-replaceable power supply units and four non-replaceable fan units.

Power Supply

NVIDIA systems that are equipped with two replaceable power supply units work in a redundant configuration. Either unit may be extracted without bringing down the system.

> Make sure that the power supply unit that you are NOT replacing is showing green for the power supply unit LED.

> Power supply units have directional air flows similar to the fan module. The fan module airflow must coincide with the airflow of all of the power supply units. If the power supply unit airflow direction is different from the fan module airflow direction, the system's internal temperature will be affected. For power supply unit air flow direction, refer to Air Flow.

To extract a power supply unit:

> The power supply slots of SN2740 and SN2410 should not be left empty for more than 5 minutes.

1. Remove the power cord from the power supply unit.
2. Grasping the handle with your hand, push the latch release with your thumb while pulling the handle outward. As the power supply unit unseats, the power supply unit status LEDs will turn off.
3. Remove the power supply unit.
   PS Unit Pulled Out

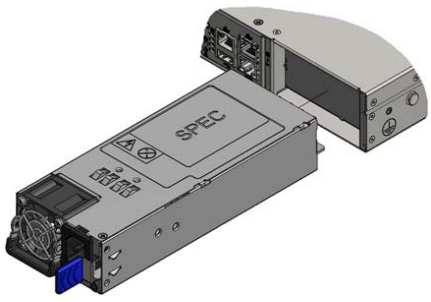

*The drawing is for illustration purposes. The design may slightly vary depending on the system.

To insert a power supply unit:

1. Make sure the mating connector of the new unit is free of any dirt and/or obstacles.

   > Do not attempt to insert a power supply unit with a power cord connected to it.

2. Insert the power supply unit by sliding it into the opening, until a slight resistance is felt.
3. Continue pressing the power supply unit until it seats completely. The latch will snap into place, confirming the proper installation.
4. Insert the power cord into the supply connector.
5. Insert the other end of the power cord into an outlet of the correct voltage.

   > The green power supply unit indicator should light. If it does not, repeat the whole procedure to extract the power supply unit and re-insert it.

Fans

The system can fully operate if one fan FRU is dysfunctional. Failure of more than one fan is not supported.

> Make sure that the fans have the air flow that matches the model number. An air flow opposite to the system design will cause the system to operate at a higher (less than optimal) temperature. For power supply unit air flow direction, refer to Air Flow.

To remove a fan unit:

1. Grasping the handle with your right hand, push the latch release (if exists) with your thumb, while pulling the handle outward. As the fan unit unseats, the fan unit status LEDs will turn off.
2. Remove the fan unit.

To insert a fan unit:

1. Make sure the mating connector of the new unit is free of any dirt and/or obstacles.
2. Insert the fan unit by sliding it into the opening until slight resistance is felt. Continue pressing the fan unit until it seats completely.

> The green Fan Status LED should light. If not, extract the fan unit and reinsert it. After two unsuccessful attempts to install the fan unit, power off the system before attempting any system debug.

Fan Module Latches Examples

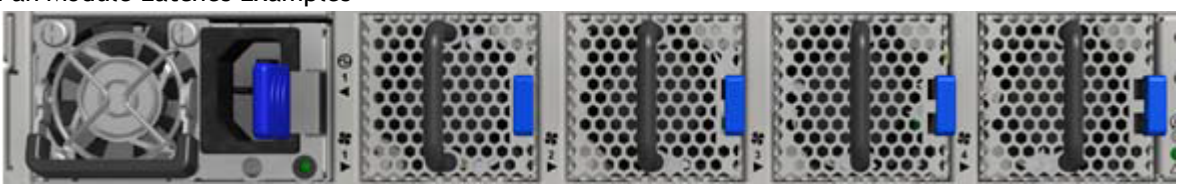



Interfaces

The systems support the following interfaces:

- Data interfaces - Ethernet: 1/10/25/40/50/56/100GbE
- USB port (mini USB in SN2100)
- RS232 Console port
- Management interface(s) (Eth. RJ45) – 100MbE/1GbE
- Reset button
- Status and Port LEDs

In order to review the full configuration options matrix, refer to Management Interfaces, PSUs and Fans.

Data Interfaces

The data interfaces use QSFP28 connectors. The full list of interfaces per system is provided in Speed and Switching Capabilities.

Each QSFP28 port can be connected with a QSFP28 cable or connector for 25/40/50/56/100GbE, or 1/10/25GbE when connecting through NVIDIA QSFP28 to SFP28 (Dynamix QSA™) adapters, hybrid or split cables. The systems offer support of up to 3.5W transceivers in all QSFP28 ports, and support of up to 1.5W in all SFP28 ports.

Some QSFP28 ports and SFP28 ports support higher power consumption transceivers, as detailed in the following table:

High Power/LR4 Transceivers Support

Model Family	Ports	Maximum High Power Support
SN2700	1, 2, 31, 32	5.0W[b]
SN2410	1, 2, 47, 48[c]	2.5W[a]
	49, 50, 55, 56	5.0W[b]
SN2100	1, 2, 15, 16	5.0W[b]
SN2010	19, 20, 21, 22	4.5W[a]
	1, 2, 17, 18[c]	2.5W
SN2201	52,53	3.5W
	49, 51	5W

Notes:
a. 4.5W high power modules are supported on NVIDIA Onyx (MLNX-OS) from version 3.6.3004 onwards.
b. 5.0W high power modules are supported on NVIDIA Onyx (MLNX-OS) from version 3.x.1xxx onwards for 100GbE Fiber Optics up to 80km.
c. SFP28 ports.

Using 5.0W Modules on Ports 49, 50, 55, 56 in SN2410M/SN2410bM

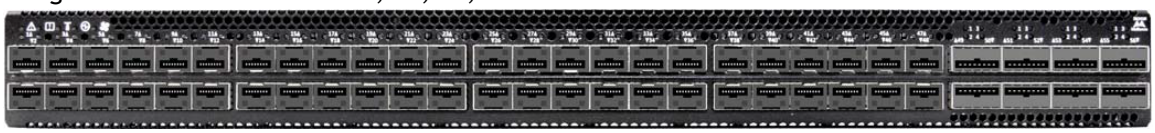

Supported Passive Cables in SN2010bM

- For server ports:
  - 25GbE cables (all ports can be used):
    - 1m-1.5m: any DAC
    - 2m: MCP2M00-A002E30N
    - 2.5m: MCP2M00-A02AE26N
    - 3m: MCP2M00-A003E26N
  - 10GbE cables (all ports can be used):
    - 0.5m to 5m: any DAC
- For IPL ports (SN2010 to SN2010 connection):
  - 40/100GbE cables (all ports can be used):
    - No limitations
  - 25GbE cables (only ports 3, 6, 9, 12, 15, 18 can be used)
    - Up to 2m: any DAC
  - 10GbE cables (all ports can be used):
    - 0.5m to 5m: any DAC
- For connections with other switches:
  - AOCs/Transceivers only

Supported 25GbE and 40/100GbE Cables on IPL Ports (SN2010 to SN2010 Connection)

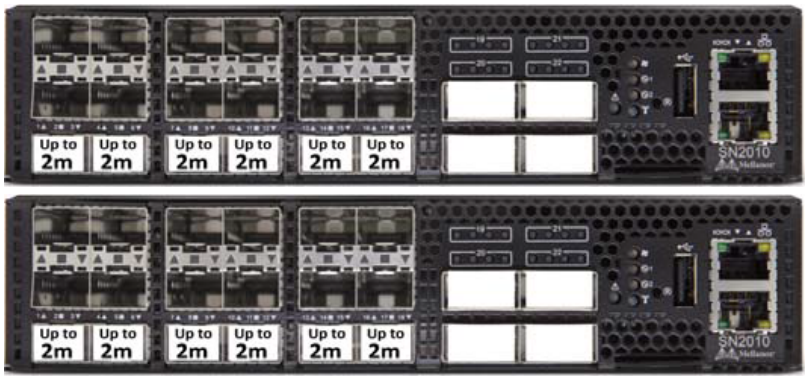

Speed

Ethernet speed must be set manually. The system's ports can be manually configured to run at speeds ranging from 10GbE to 100GbE (for more details, see Specifications). To change the port speed configuration, use the command "speed" under interface configuration mode. Refer to the *NVIDIA Onyx (MLNX-OS) User Manual* for instructions on port speed re-configuration.

I^2C/RS232 (Console)

The port labeled "Console" is an RS232 serial port on the back side of the chassis in SN2700 and SN2410, and on the front side in SN2740, SN2201 and SN2100/SN2010. It is used for initial configuration and debugging. Upon first installation of the system, you need to connect a PC to this interface and configure network parameters for remote connections. Refer to Configuring Network Attributes Using NVIDIA Onyx (MLNX-OS) to view the full procedure.

- This interface is not found in externally managed systems.
- Apart from the initial configuration, the I²C interface is made exclusively for debugging and troubleshooting. Only FAEs are authorized to connect through it.

Only original NVIDIA cables supplied with the switch package can be used to connect a switch system to the server.
Connecting any cable other than the NVIDIA supplied console cable may cause an I²C hang.
Using uncertified cables may damage the I²C interface.
Refer to the Replacement Parts Ordering Numbers appendix for harness details.

Management

The RJ45 Ethernet ports labeled "MGT " provide access for remote management. The management ports are configured with auto-negotiation capabilities by default (100MbE to 1GbE). The management ports' network attributes (such as IP address) need to be pre-configured via the RS232 serial console port or by DHCP before use. Refer to Configuring Network Attributes Using NVIDIA Onyx (MLNX-OS) to view the full procedure.

In the SN2100/SN2010 systems there is only one MGT port.

Make sure you use only FCC compliant Ethernet cables.

USB

The USB interface is USB 2.0 (mini USB in SN2100) compliant (USB 1.0 is not supported) and can be used by NVIDIA Onyx (MLNX-OS) software to connect to an external disk for software upgrade or file management. The connector comes in a standard USB shape.
To view the full matrix of the USB configuration options, refer to Management Interfaces, PSUs and Fans.

Do not use excessive force when inserting or extracting the USB disk to and from the connector.

Reset Button

The reset button is located on the rear side of the system next to the fan status LEDs in SN2700 and SN2410, and on the front side in SN2740, SN2201 and SN2100/SN2010. This reset button requires a tool to be pressed.

Do not use a sharp pointed object such as a needle or a push pin for pressing the reset button. Use a flat object to push the reset button.

To reset the system and the CPU of its management board, push the reset button and keep it pressed for up to 15 seconds.

To reset the system, the CPU of its management board, and the “admin” password, push the reset button and keep it pressed for at least 15 seconds. When using a NVIDIA Onyx (MLNX-OS) based system, this should allow you to enter without a password and set a new password for the user “admin”.
For Cumulus Linux password reset instructions, please refer to the Single User Mode - Boot Recovery section in the *Cumulus Linux User Guide*.

Status and Port LEDs

See LED Notifications.

LED Notifications

The system’s LEDs are an important tool for hardware event notification and troubleshooting.
LEDs Symbols

Symbol	Name	Description	Normal Conditions
	System Status LED	Shows the health of the system.	Green/Flashing green when booting
	Fan Status LED	Shows the health of the fans.	Green
a 	Power Supply Units LEDs	Shows the health of the power supply units.	Green
b 	Bad Port LED	Lights up when a symbol error is detected on one of the ports.	Off
	Unit Identifier LED	Lights up on command through the CLI.	Off or blue when identifying a port

a. There are two PSU LEDs in SN2100/SN2010.
b. This LED exists in SN2700 and SN2410 only.

System Status LEDs

Both of the System Status LEDs (front and back, if exist) supply identical information.
System Status LEDs - Front and Rear Sides

LED Type	System	Front	Rear
System Status LEDs 	SN2700	Yes	Yes
	SN2740	Yes	No
	SN2410	Yes	Yes
	SN2100	Yes	No
	SN2010	Yes	No
	SN2201	Yes	No

It may take up to five minutes to turn on the system. If the System Status LED shows red after five minutes, unplug the system and call your NVIDIA representative for assistance.

System Status LED Assignments

LED Behavior	Description	Action Required
Solid Green	The system is up and running normally.	N/A
Flashing Green	The system is booting up.	Wait up to five minutes for the end of the booting process.
Solid Red	Major error has occurred. For example, corrupted firmware, system is overheated etc.	If the System Status LED shows red five minutes after starting the system, unplug the system and call your NVIDIA representative for assistance.

Fan Status LEDs

LED Type	System	Front	Rear
Fan Status LEDs 	SN2700	Yes	Yes, 4
	SN2740	Yes	No
	SN2410	Yes	Yes, 4
	SN2100	Yes	No
	SN2010	Yes	No
	SN2201	Yes	Yes*, 4

*The fans status is reflected by the LEDs only once the Network Operating System boot is complete.

Fan Status Front LED Assignments

LED Behavior	Description	Action Required
Solid Green	All fans are up and running.	N/A
Solid Red	Error, one or more fans are not operating properly.	The faulty FRUs should be replaced.
Off	System boot	N/A

Fan Status Rear LED Assignments (One LED per Fan)

> ⚠ The following table does not apply to the SN2100/SN2010 systems.

LED Behavior	Description	Action Required
Solid Green	A specific fan unit is operating.	N/A
Solid Red	A specific fan unit is missing or not operating properly.	The fan unit should be replaced.
Off	System boot	N/A

> ⚠ Risk of Electric Shock! With the fan module removed, power pins are accessible within the module cavity. Do not insert tools or body parts into the fan module cavity.

Power Supply Status LEDs

Power Supply Status LEDs

LED Type	System	Front	Rear
Power Supply Unit Status LED	SN2700	Yes	Yes
	SN2740	Yes	Yes
	SN2410	Yes	Yes
	SN2100	Yes, 2	No
	SN2010	Yes, 2	No
	SN2201	Yes	Yes

> ⚠ The following information does not apply to the SN2100/SN2010 systems. In these systems, the power supply units are non-replaceable, and there is a designated LED for each unit in the system's front panel. (Front panel figures are located in the Introduction.)

There are two power supply inlets in the system (for redundancy). The system can operate with only one power supply connected. In case the power supply is an FRU, a second power supply unit can be added to support hot-swap ability. Each power supply unit has a single 2 color LED on the right side of the unit, that indicates the status of the unit.

SN2700 and SN2410 Rear Side Panel

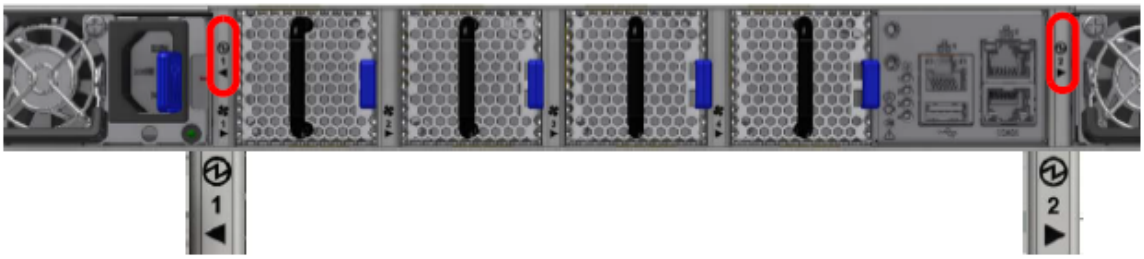

SN2740 Rear Side Panel

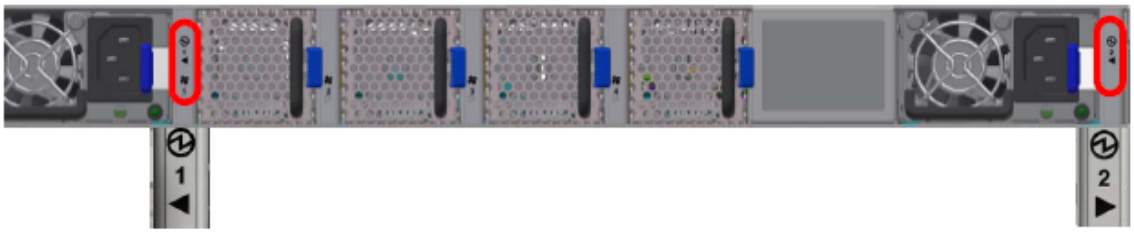

The primary power supply (PS) unit is located on the left side, and the secondary unit is located on the right side.

Power Supply Unit Status Front LED Assignments for SN2700, SN2740 and SN2410

LED Behavior	Description	Action Required
Solid Green	All plugged (one or two) power supplies are running normally.	N/A
Solid Red	PSU is faulty or disconnected.	Make sure the AC cable is plugged in and active. If the problem resumes, the FRUs might be faulty, and should then be replaced.
Off	N/A	N/A

Power Supply Unit Status Front LED Assignments for SN2100/SN2010

LED Behavior	Description	Action Required
Solid Green	Power supply is running normally.	N/A
Solid Red	PSU is faulty or disconnected.	Make sure the AC cable is plugged in and active. If the problem resumes, the PSU might be faulty.
Off	PSU not present	N/A

The power supply status LEDs on the rear side of the system (in SN2700, SN2740 and SN2410 only) are located on the PSUs themselves. Each PSU has one LED of its own.

Power Supply Unit Status Rear LED Assignments

LED Behavior	Description	Action Required
Solid Green	The PSU is running normally.	N/A
Flashing Green 1Hz	AC present / Only 12VSB on (PSU off) or PSU in Smart-on state.	Call your NVIDIA representative for assistance.
Amber	AC cord unplugged or AC power lost while the second power supply still has AC input power.	Plug in the AC cord of the faulty PSU.
	PS failure (including voltage out of range and power cord disconnected).	Check voltage. If OK, call your NVIDIA representative for assistance.
Flashing Amber	Power supply warning events where the power supply continues to operate; high temp, high power, high current, slow fan.	Call your NVIDIA representative for assistance.
Off	No AC power to all power supplies.	Call your NVIDIA representative for assistance.

⚠ The table above (Power Supply Unit Status Rear LED Assignments) does not apply to the SN2100/SN2010 systems.

Unit Identification LED

The UID LED is a debug feature, that the user can use to find a particular system within a cluster by turning on the UID blue LED.

To activate the UID LED on a switch system, run:

```
switch (config) # led MGMT uid on
```

To verify the LED status, run:

```
switch (config) # show leds
Module LED Status
------------------------------------------------------------------------------
MGMT UID Blues
```

To deactivate the UID LED on a switch system, run:

```
switch (config) # led MGMT uid off
```

Bad Port LED

The Bad Port LED indicator is used to indicate symbol errors in one or more system ports.

Bad Port LED Assignments

LED Behavior	Description	Action Required
Off	No symbol errors have been received in last few seconds (normal condition).	N/A
Flashing Amber	Error, one or more ports have received symbol errors. Possible causes are: • Bad cable • Bad connection • Bad connector	Check symbol error counters on the system UI to identify the ports. Replace the cable on these ports.

Port LEDs

System	Port LEDs
SN2700	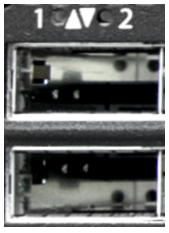

System	Port LEDs
SN2740	
SN2410	QSFP28:  SFP28: 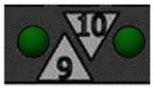
SN2010	QSFP: 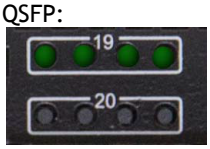 SFP: 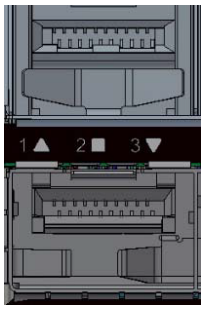
SN2100	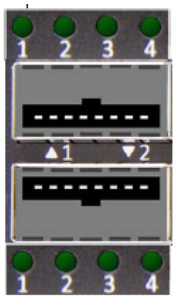

System	Port LEDs
SN2201	RJ45:  QSFP28: 

In the SN2410 systems, the status of each pair of adjacent QSFP28 ports is indicated by four LEDs, as shown in the picture above:

- While the bottom LEDs signify the port status in regular condition, the upper LEDs operate only when the port is split.
- When one port is split to two, a connection of 100GbE can be utilized in its adjacent port.
- When one port is split to four, it adjacent port is canceled.
- If the ports run at a 100GbE/40GbE speed each, the two lower LEDs (2 and 4) will light green.
- If the ports run at a 50GbE speed each, the left LEDs (1 and 2) will light green for the upper port, and the right LEDs (3 and 4) will light green for the lower port.
- If the ports run at a 25GbE/10GbE speed each, all LEDs may light green, according to the selected lane.

SFP and QSFP Port LEDs in Ethernet System Mode

LED Behavior	Description	Action Required
Off	Link is down	Check the cable.
Solid Green	Link is up with no traffic	N/A
Flashing Green	Link is up with traffic	N/A
Flashing Amber	A problem with the link	Check the cable, and replace it if needed.

1GBase-T LEDs in Ethernet System Mode

LED Behavior	Description	Action Required
Off	Link is down	Check that the near-end and far-end connectors are properly plugged, check cable integrity.
Solid Yellow	Link is up	N/A
Solid Green	Link is up with no traffic	N/A
Flashing Green	Link is up with traffic	N/A

Inventory Information

The system's inventory parameters (such as Serial Number, Part Number, GUID and MAC address) can be extracted from the inventory pull-out tab on the lower right side of the front panel.
In some systems, there is no pull-out tab, and the information is provided on labels in several locations.

SN2700 Pull-out Tab



SN2740 Inventory Information Illustration

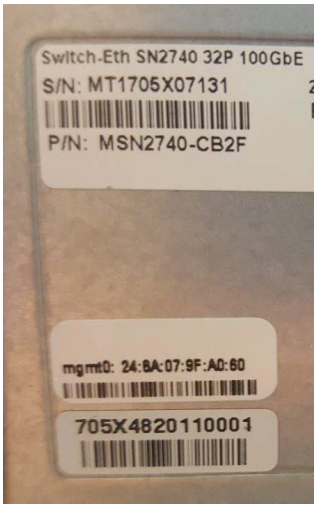

SN2410 Inventory Information Illustration

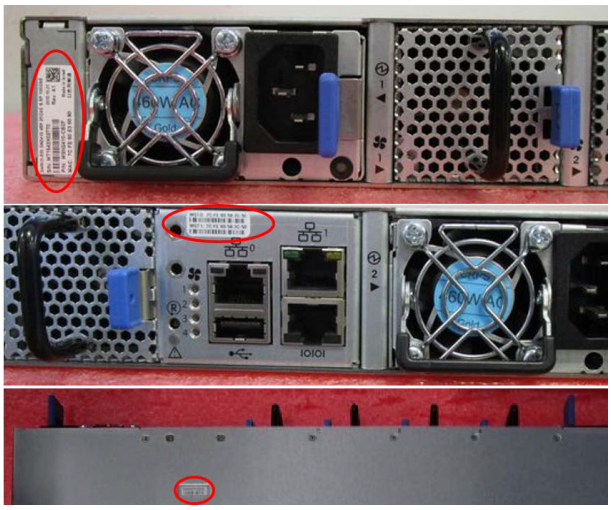

SN2100 Pull-out Tab



SN2010 Pull-out Tab

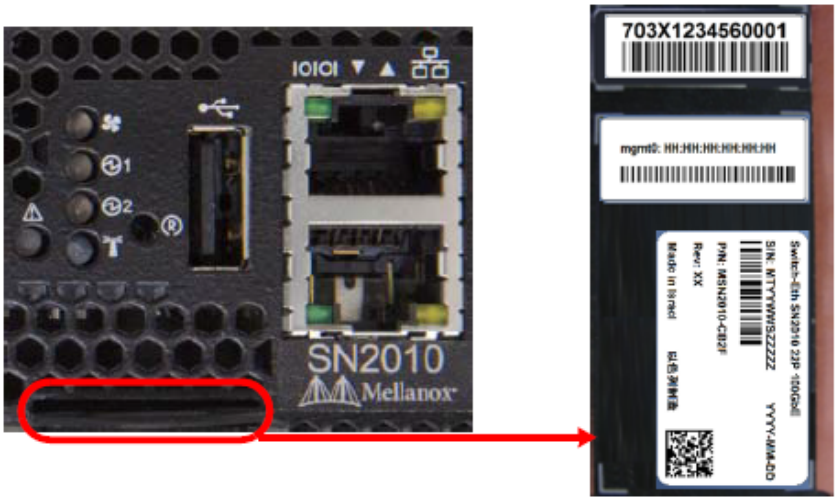

SN2201 Pull-out Tab



Software Management

The system includes an embedded management CPU card that runs NVIDIA Onyx® (MLNX-OS®) management software. This system includes a CLI, WebUI, SNMP, system management software, Ethernet protocols and IB management software (OpenSM).

- For NVIDIA Onyx (MLNX-OS) systems management package and related documentation, visit the product page at https://docs.nvidia.com/networking/category/onyx.
- For Cumulus® Linux® software management instructions, refer to the *Cumulus Linux User Guide*.

The Ethernet ports for remote management connect to Ethernet systems. These systems must be configured to 100Mb/1Gb auto-negotiation.

No more than two subnet managers are recommended for any single fabric.

Upgrading Software

NVIDIA Onyx (MLNX-OS) Software Upgrade

Software and firmware updates are available from the NVIDIA Support website. Check that your current revision is the latest one available on the NVIDIA Support website. If you do not have the latest revision, upgrade your software using the CLI or the GUI. Copy the updated software to a known location on a remote server within the user's LAN.

For further information please refer to the *NVIDIA Onyx (MLNX-OS) Software User Manual* in the "Upgrading Onyx (MLNX-OS) Software" section.

Prior to updating, read and follow all of the instructions regarding the updating of the software on your system.

Switch Firmware Update

The systems do not require firmware updating. Firmware updating is done through the NVIDIA Onyx (MLNX-OS) management software.

Cumulus Linux Software Upgrade

For Cumulus Linux software upgrade instructions, see Upgrading Cumulus Linux in the Cumulus Linux User Guide.

Troubleshooting

Problem Indicator	Symptoms	
LEDs	System Status LED is blinking for more than 5 minutes	Cause: NVIDIA Onyx (MLNX- Solution: Connect to the sy FAE if the NVIDIA Onyx (ML
	System Status LED is red	Cause: • Critical system faul • Over temperature Solution: • Check environment
	Fan Status LED is red	Cause: Possible fan issue Solution: • Check that the fan • Replace the fan FR
	PSU Status LED is red	Cause: Possible PSU issue Solution: • Check/replace the • Replace the PSU if

System boot failure while using NVIDIA Onyx (MLNX-OS)	Software upgrade failed on x86 based systems	Solution:
		• Connect the RS232
		• Push the system's r
		• Press the ArrowUp
		`Default image: 'SX_X86_64`
		`Press enter to boot this i`
		`Booting default image in 3`
		`Boot Menu`
		`----------`
		`0: SX_X86_64 SX_3.4.0008 2`
		`1: SX_X86_64 SX_3.4.0007 2`
		`----------`
		`Use the ArrowUp and Arrowd`
		`Press enter to boot the se`
		`Highlighted entry is 0:`
		`"`
		• Select previous ima

System boot failure while using Cumulus Linux	Software upgrade failed on x86 based systems	See Monitoring and Trouble

Problem Indicator	Symptoms	

System date and time reset	The date and time settings were reset to the default configuration following an AC power loss	Cause:
		Date and time are reconfig
		Solution:
		• To set the system's
		`# clock set <hh:mm`
		• To verify the config
		`# show clock`
		• It is recommended that, run:
		`> enable`
		`# config terminal`
		`(config)# ntp serv`
		• To verify NTP time
		`# show ntp`
		For full configuration instru

Specifications

SN2700 Series

Feature		Value
Mechanical	Size:	Standard depth - 1.72” (H) x 16.84” (W) x 27” (D). 43.8mm (H) x 427.83mm (W) x 686.8mm (D).
		Short depth - 1.72" (H) x 16.84" (W) x 17" (D). 43.9mm (H) x 428mm (W) x 432mm (D).
	Mounting:	19” Rack mount
	Weight:	1 PSU: 10.23kg, 2 PSUs: 11.1kg
	Speed:	10/25/40/50/56/100GbE per port
	Connector cage:	32 QSFP28
Environmental	Temperature:	Operational: 0° to 40°C Non-Operational: -40° to 70°C
	Humidity:	Operational: 10% - 85% non-condensing Non-Operational: 10% - 90% non-condensing
	Altitude:	3050m
	Noise level:	71.6 dB(A)
Regulatory	Safety/ EMC:	CB, cTUVus, CE, CU, S_Mark, CE, FCC, VCCI, ICES, RCM, BSMI, KCC, CCC
	RoHS:	RoHS complaint
Power Supply AC and DC	Input Voltage:	1x/2x, -127VAC; 50/60Hz 4.5A; 200-240 50/60Hz 2.9A/ 40.5-60VDC 12A/ 192-288VDC (not certified)
		-48VDC, Input voltage range (-40) to (-72)VDC
	Global Power Consumption:	40GbE/100GbE Models - Typical power with passive cables (ATIS): 130W
Main Devices	CPU:	Intel x86 1.40GHz Dual Core
	PCIe:	4x Gen2.0
	Switch:	NVIDIA Spectrum
	Memory:	8GB DDR3 RAM, 32G SSD for systems based on Switch rev. B1 and earlier 8GB DDR3 RAM, 16G SSD for systems based on Switch rev. B2 and higher
Throughput		6.4Tb/s

SN2740 Series (End of Life)

Feature		Value
Mechanical	Size:	Standard - 1.72” (H) x 16.84” (W) x 27” (D). 43.8mm (H) x 427.83mm (W) x 686.8mm (D)
	Mounting:	19” Rack mount
	Weight:	1 PSU: 10.23kg, 2 PSUs: 11.1kg
	Speed:	10/25/40/50/56/100GbE per port
	Connector cage:	32 QSFP28
Environmental	Temperature:	Operational: 0° to 40°C Non-Operational: -40° to 70°C
	Humidity:	Operational: 10% - 85% non-condensing Non-Operational: 10% - 90% non-condensing
	Altitude:	3050m
	Noise level:	71.6 dB(A)
Regulatory	Safety/ EMC:	CB, cTUVus, CE, CU, S_Mark, CE, FCC, VCCI, ICES, RCM, BSMI, KCC, CCC
	RoHS:	RoHS complaint
Power	Input Voltage:	1x/2x, 100-127VAC; 50/60Hz 4.5A; 200-240 50/60Hz 2.9A/ 40.5-60VDC 12A/ 192-288VDC (not certified)
	Global Power Consumption:	40GbE/100GbE Models - Typical power with passive cables (ATIS): 140.4W (same as the 100GbE models)
Main Devices	CPU:	Intel x86 2.40GHz Quad Core
	PCIe:	4x Gen2.0
	Switch:	NVIDIA Spectrum
	Memory:	8GB DDR3 RAM, 16G SSD
Throughput		6.4Tb/s

SN2410 Series

Feature		Value
Mechanical	Size:	43.9mm (H) x 438mm (W) x 394mm (D) 1.72"(H) x 17.24"(W) x 15.5"(D)
	Mounting:	19” Rack mount
	Weight:	1 PSU weight 6.726kg (14.8 lb) 2 PSU weight 7.526kg (16.6 lb)
	Speed:	10/25GbE per port (ports 1-48), 10/25/40/50/56/100GbE per port (ports 49-56)
	Connector cage:	48xSFP28 and 8xQSFP28

Feature		Value
Environmental	Temperature:	Operational: 0° to 40°C Non-Operational: -40° to 70°C
	Humidity:	Operational: 10% - 85% non-condensing Non-Operational: 10% - 90% non-condensing
	Altitude:	3050m
	Noise level:	70.9 dB(A)
Regulatory	Safety/ EMC:	CB, cTUVus, CE, CU, S_Mark, CE, FCC, VCCI, ICES, RCM, BSMI, KCC, CCC
	RoHS:	RoHS complaint
Power Supply AC and DC	Input Voltage:	1x/2x, 100-127VAC; 50/60Hz 4.5A; 200-240 50/60Hz 2.9A/ 40.5-60VDC 12A/ 192-288VDC (not certified)
		-48VDC, Input voltage range (-40) to (-72)VDC
	Global Power Consumption:	40GbE/100GbE Models - Typical power with passive cables (ATIS): 105W
Main Devices	CPU:	Intel x86 1.40GHz Dual Core
	PCIe:	4x Gen2.0
	Switch:	NVIDIA Spectrum
	Memory:	8GB DDR3 RAM, 32G SSD for systems based on Switch rev. B1 and earlier 8GB DDR3 RAM, 16G SSD for systems based on Switch rev. B2 and higher
Throughput		4Tb/s

SN2100 Series

Feature		Value
Mechanical	Size:	43.8mm (H) x 200mm (W) x 508mm (D) 1.72" (H) x 7.87" (W) x 20" (D)
	Mounting:	19” Rack mount
	Weight:	4.540kg
	Speed:	10/25/40/50/56/100GbE per port
	Connector cage:	16xQSFP28
Environmental	Temperature:	Operational: 0° to 40°C Non-Operational: -40° to 70°C
	Humidity:	Operational: 10% - 85% non-condensing Non-Operational: 10% - 90% non-condensing
	Altitude:	3050m
	Noise level:	73.7 dB(A)
Regulatory	Safety/ EMC:	CB, cTUVus, CE, CU, S_Mark, CE, FCC, VCCI, ICES, RCM, BSMI, KCC, CCC

Feature		Value
	RoHS:	RoHS complaint
Power	Input Voltage:	1x/2x, 100-240Vac, 4A
	Global Power Consumption:	40GbE/100GbE Models - Typical power with passive cables (ATIS): 74W
Main Devices	CPU:	Intel x86 2.40GHz Quad Core
	PCIe:	4x Gen2.0
	Switch:	NVIDIA Spectrum
	Memory:	SDRAM: 8GB DDR3L 1600 MT/s SO-DIMM Storage: 16GB Dual Channel MLC M.2-SATA SSD
Throughput		3.2Tb/s

SN2010 Series

Feature		Value
Mechanical	Size:	43.8mm (H) x 200mm (W) x 508mm (D) 1.72" (H) x 7.87" (W) x 20" (D)
	Mounting:	19” Rack mount
	Weight:	4.500kg
	Speed:	10/25/40/50/56/100GbE per port
	Connector cage:	18 ports of 10/25GbE and 4 splittable ports of 40/100GbE
Environmental	Temperature:	Operational: 0° to 40°C Non-Operational: -40° to 70°C
	Humidity:	Operational: 10% - 85% non-condensing Non-Operational: 10% - 90% non-condensing
	Altitude:	3050m
	Noise level:	73.7 dB(A)
Regulatory	Safety/ EMC:	CB, cTUVus, CE, CU, S_Mark, CE, FCC, VCCI, ICES, RCM, BSMI, KCC, CCC
	RoHS:	RoHS complaint
Power	Input Voltage:	1x/2x, 100-240Vac, 4A
	Global Power Consumption:	Typical power with passive cables (ATIS): 66W
Main Devices	CPU:	Intel x86 2.40GHz Quad Core
	PCIe:	4x Gen2.0
	Switch:	NVIDIA Spectrum
	Memory:	SDRAM: 8GB DDR3L 1600 MT/s SO-DIMM Storage: 16GB Dual Channel MLC M.2-SATA SSD
Throughput		1.7Tb/s

SN2201 Series

Feature		Value
Mechanical	Size:	43.9mm (H) x 428mm (W) x 432mm (D) 1.72" (H) x 16.84" (W) x 17" (D)
	Mounting:	19” Rack mount
	Weight:	7.410kg
	Speed:	1/10/25/40/50/56/100GbE per QSFP28 port 10/100/1000Mbase-T per RJ45 port
	Connector cage:	48 RJ45 ports of 1GbE and 4 QSFP28 ports of 100GbE
Environmental	Temperature:	Operational: 0° to 40°C Non-Operational: -40° to 70°C
	Humidity:	Operational: 10% - 85% non-condensing Non-Operational: 10% - 90% non-condensing
	Altitude:	5000m
	Noise level:	TBD
Regulatory	Safety/ EMC:	CB, cTUVus, CE, CU, S_Mark, CE, FCC, VCCI, ICES, RCM, BSMI, KCC, CCC
	RoHS:	RoHS complaint
Power	Input Voltage:	100-127Vac, 50/60Hz 4A (x2), 200-240Vac, 50/60Hz 2A (x2)
	Global Power Consumption:	Typical power with passive cables (ATIS): 98W
Main Devices	CPU:	Intel x86 Dual Core
	PCIe:	4x Gen2.0
	Switch:	NVIDIA Spectrum
	Memory:	SDRAM: 8GB ECC DDR4 SO-DIMM Storage: 20GB SSD M.2 PCIe Gen 3
Throughput		448GB/s

Appendixes

The document contains the following appendixes:

- Accessory and Replacement Parts
- Thermal Threshold Definitions
- Interface Specifications
- Disassembly and Disposal

Accessory and Replacement Parts

Ordering Part Numbers for Replacement Parts

Part Number	Legacy Part Number	Part Description	Supported Systems	Notes
930-9BRKT-00JC-000	MTEF-KIT-A	Rack installation kit for 1U systems to be mounted into short or standard depth racks	SN2700	Included in the SN2700 package.
930-9NRKT-00JT-000	MTEF-KIT-S	Rack installation kit for standard depth 1U systems to be mounted into standard depth racks	SN2700	--
930-9NRKT-00JE-000	MTEF-KIT-BP	Rack installation kit for 1U wide systems to be mounted into short depth racks	SN2410, SN2740	--
930-9NRKT-00JV-000	MTEF-KIT-SP	Rack installation kit for 1U wide systems to be mounted into standard depth racks	SN2410, SN2740	Included in the SN2410 and SN2740 packages.
930-9NRKT-00JG-000	MTEF-KIT-D	Rack installation kit for SN2100 series short depth 1U switches, allows installation of one or two switches side-by-side into standard depth racks	SN2010, SN2100	--
930-9BPSU-00JX-000	MTEF-PSF-AC-A	460W AC Power Supply w/ P2C air flow (rear to front)	SN2740, SN2700, SN2410	This item is discontinued. It is replaced by MTEF-PSF-AC-I.
930-9BPSU-00JF-000	MTEF-PSR-AC-A	460W AC Power Supply w/ C2P air flow (front to rear)	SN2700, SN2740, SN2410	This item is discontinued. It is replaced by MTEF-PSR-AC-I.
930-9BPSU-00J4-000	MTEF-PSF-AC-I	NVIDIA Power-Supply Unit, 550W AC, P2C Airflow, For SB7700, SB7800, SB7890, SN2410, SN2700, SX6710, SN2740, SX1410, SX1710 switches, Power cord included	SN2700, SN2740, SN2410	The Network operating system identifies this module as a 460W PSU.
930-9BPSU-00JL-000	MTEF-PSR-AC-I	NVIDIA Power-Supply Unit, 550W AC, C2P Airflow, For SB7700, SB7800, SB7890, SN2410, SN2700, SX6710, SN2740 ,SX1410, SX1710 switches, Power cord included	SN2700, SN2740, SN2410	The Network operating system identifies this module as a 460W PSU.

Part Number	Legacy Part Number	Part Description	Supported Systems	Notes
HAR000028	N/A	Harness RS232 2M cable – DB9 to RJ-45	SN2700, SN2740, SN2410, SN2010, SN2100	--
ACC000501	N/A	Power cord Type C13-C14	SN2700, SN2740, SN2410, SN2010, SN2100	--
930-9BFAN-00IJ-000	MTEF-FANF-A	FAN MODULE W/ P2C air flow (rear to front)	SN2700, SN2410	--
930-9BFAN-00IY-000	MTEF-FANR-A	FAN MODULE W/ C2P air flow (front to rear)	SN2700, SN2410	--

Thermal Threshold Definitions

Three thermal threshold definitions are measured by the Spectrum ASICs, and impact the overall switch system operation state as follows:

- Warning – 105°C: On managed systems only: When the ASIC device crosses the 100°C threshold, a Warning Threshold message will be issued by the management software, indicating to system administration that the ASIC has crossed the Warning threshold. Note that this temperature threshold does not require nor lead to any action by hardware (such as switch shutdown).
- Critical – 120°C: When the ASIC device crosses this temperature, the switch firmware will automatically shut down the device.
- Emergency – 130°C: In case the firmware fails to shut down the ASIC device upon crossing its Critical threshold, the device will auto-shutdown upon crossing the Emergency (130°C) threshold.

For thermal threshold definitions in Cumulus Linux, see Configuring Net-SNMP Event Notification Traps in the Cumulus Networks Help Center.

Interface Specifications

QSFP28 Pin Description

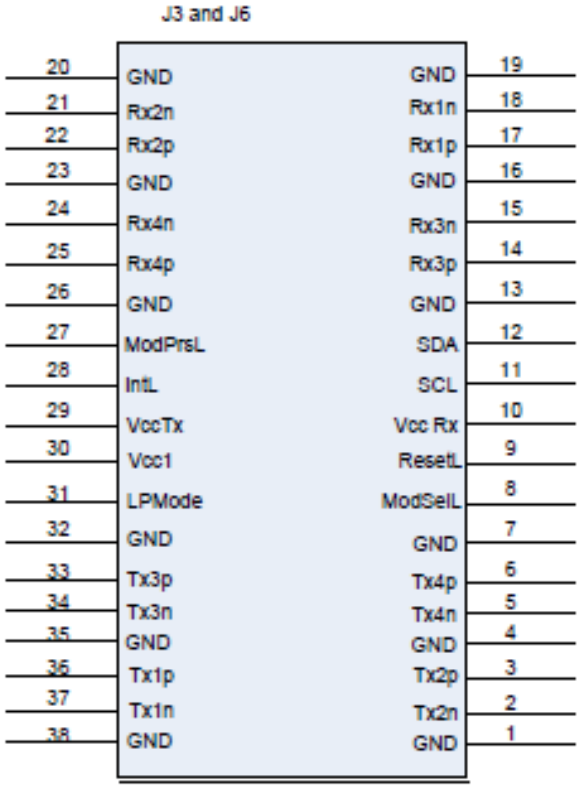

QSFP Pin Description

Connector Pin Number	Symbol	Signal Description
1	GND	Ground
2	Tx2n	Connected to Port 2 lane Rx Inverted Data
3	Tx2p	Connected to Port 2 lane Rx Non-Inverted Data
4	GND	Ground
5	Tx4n	Connected to Port 4 lane Rx Inverted Data
6	Tx4p	Connected to Port 4 lane Rx Non-Inverted Data
7	GND	Ground
8	Mod-SelL	Cable/Module Select
9	ResetL	Cable/Module Reset
10	Vcc Rx	+3.3 V Power supply receiver
11	SCL	2-wire serial interface clock

Connector Pin Number	Symbol	Signal Description
12	SDA	2-wire serial interface data
13	GND	Ground
14	Rx3p	Connected to Port 3 lane Tx Non-Inverted Data
15	Rx3n	Connected to Port 3 lane Tx Inverted Data
16	GND	Ground
17	Rx1p	Connected to Port 1 lane Tx Non-Inverted Data
18	Rx1n	Connected to Port 1 lane Tx Inverted Data
19	GND	Ground
20	GND	Ground
21	Rx2n	Connected to Port 2 lane Tx Inverted Data
22	Rx2p	Connected to Port 2 lane Tx Non-Inverted Data
23	GND	Ground
24	Rx4n	Connected to Port 4 lane Tx Inverted Data
25	Rx4p	Connected to Port 4 lane Tx Non-Inverted Data
26	GND	Ground
27	ModPrsL	Module/cable Present
28	IntL	Interrupt
29	Vcc Tx	+3.3 V Power supply transmitter
30	Vcc 1	+3.3 V Power Supply
31	LPMode	Low Power Mode
32	GND	Ground
33	Tx3p	Connected to Port 3 lane Rx Non-Inverted Data
34	Tx3n	Connected to Port 3 lane Rx Inverted Data
35	GND	Ground
36	Tx1p	Connected to Port 1 lane Rx Non-Inverted Data
37	Tx1n	Connected to Port 1 lane Rx Inverted Data
38	GND	Ground

SFP28 Pin Description

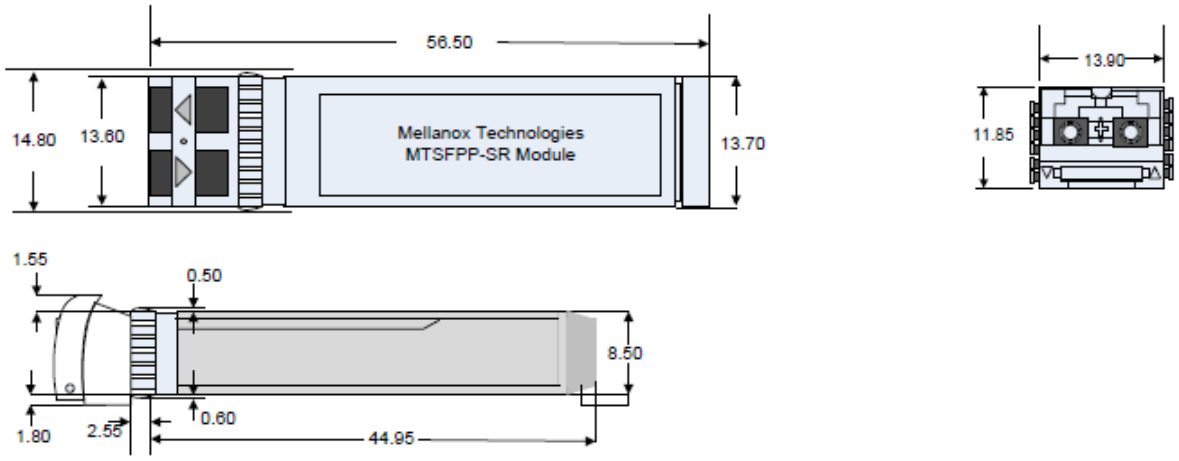

Rear View of Module with Pin Placement

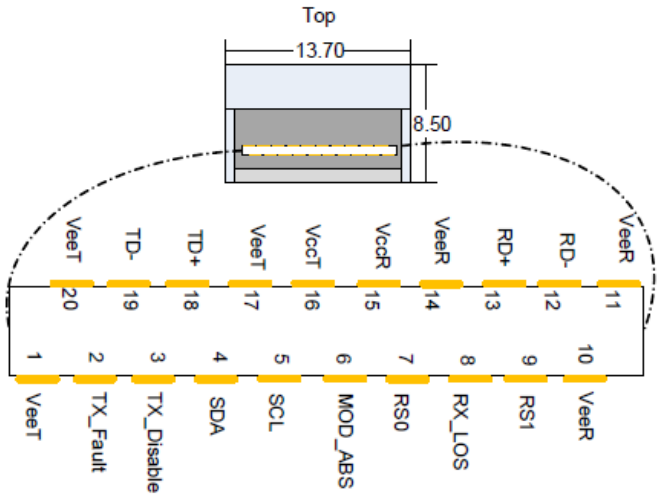

SFP Pin Description

Pin	Symbol Name	Description	Note
1	VeeT	Module Transmitter Ground	--
2	TX_Fault	Module Transmitter Fault	a
3	TX_Disable	Transmitter Disable. Turns off transmitter laser output	b
4	SDA	2-wire Serial Interface Data Line	c
5	SCL	2-wire Serial Interface Clock Line	d
6	MOD_ABS	Module Absent. Grounded within the module	d
7	RS0	No connection required	--
8	Rx_LOS	Loss of Signal indication. Logic 0 indicates normal operation.	d
9	RS1	No connection required	--
10	VeeR	Receiver Ground (Common with Transmitter Ground)	a
11	VeeR	Receiver Ground (Common with Transmitter Ground)	a

Pin	Symbol Name	Description	Note
12	RD-	Receiver Inverted DATA out. AC Coupled	--
13	RD+	Receiver Non-inverted DATA out. AC Coupled	--
14	VeeR	Receiver Ground (Common with Transmitter Ground)	a
15	VccR	Receiver Power Supply	--
16	VccT	Transmitter Power Supply	--
17	VeeT	Transmitter Ground (Common with Receiver Ground)	a
18	TD+	Transmitter Non-Inverted DATA in. AC Coupled	--
19	TD-	Transmitter Inverted DATA in. AC Coupled	--
20	VeeT	Transmitter Ground (Common with Receiver Ground)	a

Notes:

a. TFAULT is an open collector/drain output, which should be pulled up with a 4.7k-10k Ohms resistor on the host board if intended for use. Pull up voltage should be between 2.0V to Vcc + 0.3V. A high output indicates a transmitter fault caused by either the TX bias current or the TX output power exceeding the preset alarm thresholds. A low output indicates normal operation. In the low state, the output is pulled to <0.8V.
b. Laser output disabled on TDIS >2.0V or open, enabled on TDIS <0.8V
c. Should be pulled up with 4.7kΩ-10kΩ on host board to a voltage between 2.0V and 3.6V. MOD_ABS pulls line low to indicate module is plugged in.
d. LOS is open collector output. Should be pulled up with 4.7kΩ-10kΩ on host board to a voltage between 2.0V and 3.6V. Logic 0 indicates normal operation; logic 1 indicates loss of signal.

RJ-45 CONSOLE and I²C Interface

RJ-45 Console and I²C interfaces are integrated in the same connector. Due to that, connecting any cable other than the Mellanox supplied console cable may cause an I²C hang.
Using uncertified cables may damage the I²C interface. Refer to the Replacement Parts Ordering Numbers appendix for harness details.

Signal	Pin#	Color
Not connected	1	G/W
I²C_SCL	2	G
TXD	3	O/W
Not connected	4	Bl
GND	5	Bl/W
RXD	6	O
I²C_SDA	7	Br/W
Not connected	8	Br

RJ45 to DB9 Harness Pinout

The RS232 harness cable (DB9 to RJ45) is provided within the package to connect a host PC to the system's Console RJ45 port.

RJ45 to DB9 Harness Pinout

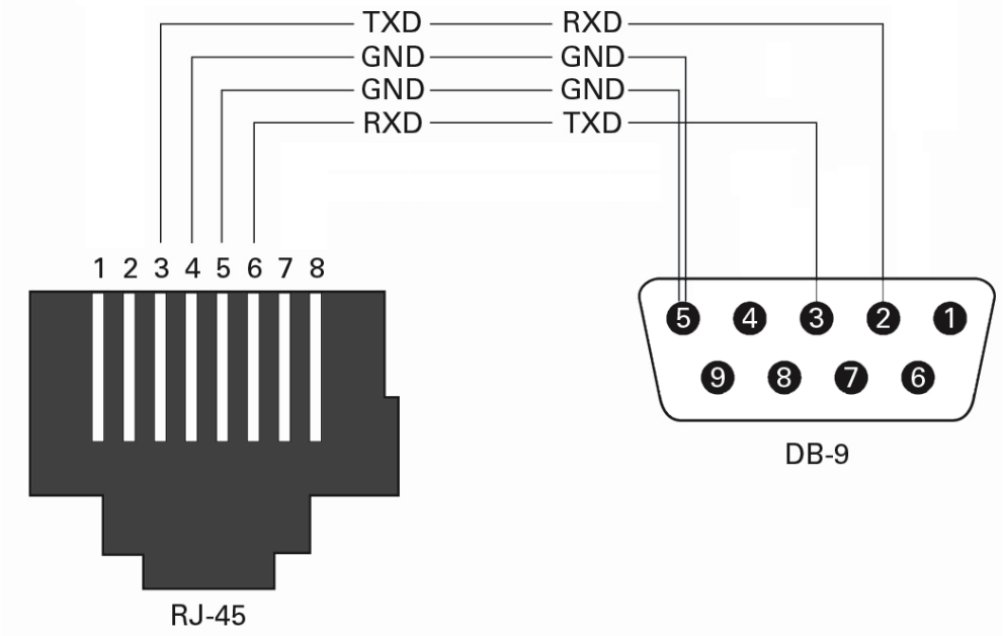

RJ45 to RJ45 Harness

2m RJ45-to-RJ45 serial port cable is provided in the SN2410 and SN2700 packages.

The harness must be used when connecting the switch serial port with the terminal server/console server.

> ⚠ The new harness can be extended by an ordinary flat 1-to-1 RJ45 cable.

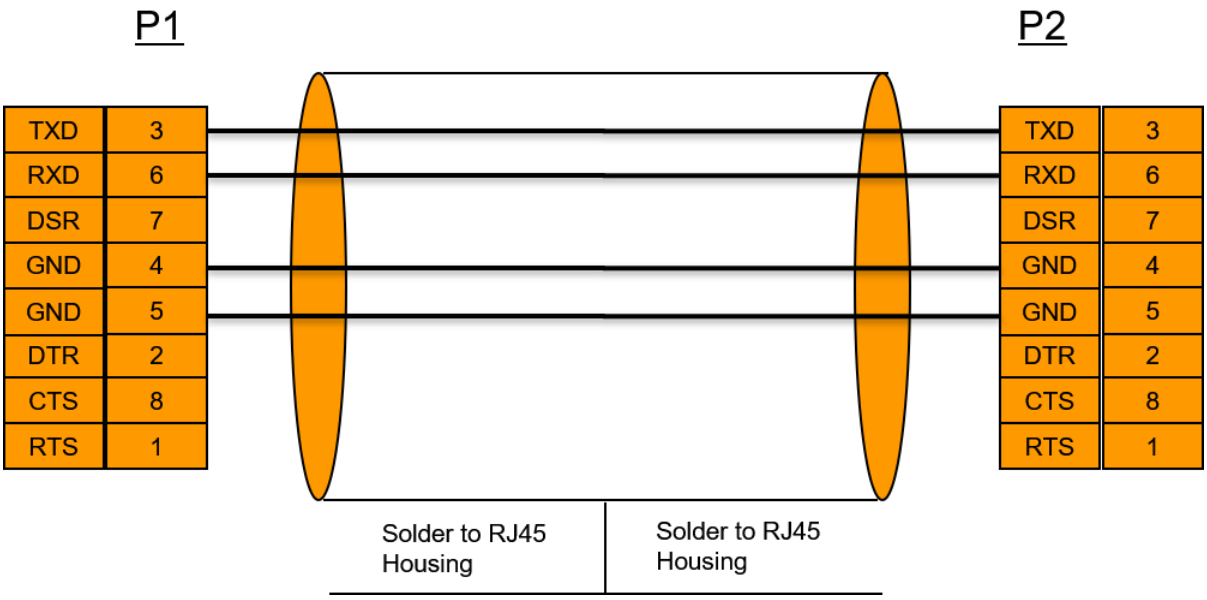

Disassembly and Disposal

Disassembly Procedure

To disassemble the system from the rack:

1. Unplug and remove all connectors.
2. Unplug all power cords.
3. Remove the ground wire.
4. Unscrew the center bolts from the side of the system with the bracket.

   > Support the weight of the system when you remove the screws so that the system does not fall.

5. Slide the system from the rack.
6. Remove the rail slides from the rack.
7. Remove the caged nuts.

Disposal

According to the WEEE Directive 2002/96/EC, all waste electrical and electronic equipment (EEE) should be collected separately and not disposed of with regular household waste. Dispose of this product and all of its parts in a responsible and environmentally friendly way.

Follow the instructions found at http://www.mellanox.com/page/dismantling_procedures for proper disassembly and disposal of the switch, according to the WEEE directive.



Document Revision History

Date	Revision	Description
July 2022	3.7	Updated OPNs in: • Ordering Information • Installation • Accessory and Replacement Parts Updated Interface Specifications
June 2022	3.6	Updated: • LED Notifications • Interfaces • Interface Specifications • Maximum altitude updated to 5000m in SN2201 table under Specifications
January 27, 2022	3.5	Added the SNN2201 system. Updated: • Installation • Interfaces • Specifications
November 23, 2021	3.4	Updated Global Power Consumption in Specifications.
June 10, 2021	3.3	Updated Ordering Information.
November 29, 2020	3.2	Updated Accessory and Replacement Parts.
May 26, 2020	3.1	Added MSN2010-CB2F3C to the SN2100 Ordering Part Numbers (OPNs) table under Ordering Information.
May 3, 2020	3.0	Updated: • Cable Installation.
March 29, 2020	2.9	Updated Thermal Threshold Definitions.
December 2019	2.8	Updated: • Ordering Information • Installation
August 2019	2.7	Updated: • Ordering Information • Interfaces • Specifications • Interface Specifications • Mellanox Spectrum is a registered trademark; logo updated.
March 2019	2.6	Updated: • Interfaces • Management
December 2018	2.5	Migrated to online format; minor reorganization
October 2018	2.4	Updated High Power/LR4 Transceivers Support in the Interfaces chapter.

Date	Revision	Description
August 2018	2.3	Added Static Single Switch Rail Kit for SN2100/ SN2010
July 2018	2.2	Updated “Data Interfaces” and its sub-sections.
March 2018	2.1	Added SN2010 Updated “MLNX-OS” to “Onyx (MLNX-OS)” throughout the document
December 2017	2.0	Minor format updates Updated "High Power/LR4 Transceivers Support”
October 2017	1.9	Added SN2740 Updated: • “Installation Kit” • “System Installation and Initialization” • “SN2410 Splitting Options”
February 2017	1.8	Updated "Unit Identification LED”
	1.7	Updated: • “Data Interfaces” • “Specifications” • “RJ45 to DB9 Harness Pinout”
November 2016	1.6	Updated “Specifications”
September 2016	1.5	Added “Noise Level” to “Specifications” Updated: • “Reset Button” • “Status and Port LEDs”
June 2016	1.4	Updated: • “Introduction to Mellanox SN2000 Spectrum™ Ethernet Switch Systems” • “Ordering Information” • “Side by Side Mounting for SN2100/SN2010 Rail Kit”
May 2016	1.3	Added SX1012 to the following sections: • “Introduction to Mellanox SN2000 Spectrum™ Ethernet Switch Systems” • “Installation” • “Interfaces” • “Specifications” • “Accessory and Replacement Parts”
March 2016	1.2	Added "Taiwan BSMI Class A Statement in Safety Warnings" Updated: • “Introduction to Mellanox SN2000 Spectrum™ Ethernet Switch Systems” • “Software Management” • “Troubleshooting Instructions” • “Specifications” • “Accessory and Replacement Parts”
December 2015	1.1	Added SN2410
August 2015	1.0	First revision

Notice

This document is provided for information purposes only and shall not be regarded as a warranty of a certain functionality, condition, or quality of a product. Neither NVIDIA Corporation nor any of its direct or indirect subsidiaries and affiliates (collectively: “NVIDIA”) make any representations or warranties, expressed or implied, as to the accuracy or completeness of the information contained in this document and assumes no responsibility for any errors contained herein. NVIDIA shall have no liability for the consequences or use of such information or for any infringement of patents or other rights of third parties that may result from its use. This document is not a commitment to develop, release, or deliver any Material (defined below), code, or functionality.

NVIDIA reserves the right to make corrections, modifications, enhancements, improvements, and any other changes to this document, at any time without notice.

Customer should obtain the latest relevant information before placing orders and should verify that such information is current and complete.

NVIDIA products are sold subject to the NVIDIA standard terms and conditions of sale supplied at the time of order acknowledgement, unless otherwise agreed in an individual sales agreement signed by authorized representatives of NVIDIA and customer (“Terms of Sale”). NVIDIA hereby expressly objects to applying any customer general terms and conditions with regards to the purchase of the NVIDIA product referenced in this document. No contractual obligations are formed either directly or indirectly by this document.

NVIDIA products are not designed, authorized, or warranted to be suitable for use in medical, military, aircraft, space, or life support equipment, nor in applications where failure or malfunction of the NVIDIA product can reasonably be expected to result in personal injury, death, or property or environmental damage. NVIDIA accepts no liability for inclusion and/or use of NVIDIA products in such equipment or applications and therefore such inclusion and/or use is at customer’s own risk.

NVIDIA makes no representation or warranty that products based on this document will be suitable for any specified use. Testing of all parameters of each product is not necessarily performed by NVIDIA. It is customer’s sole responsibility to evaluate and determine the applicability of any information contained in this document, ensure the product is suitable and fit for the application planned by customer, and perform the necessary testing for the application in order to avoid a default of the application or the product. Weaknesses in customer’s product designs may affect the quality and reliability of the NVIDIA product and may result in additional or different conditions and/or requirements beyond those contained in this document. NVIDIA accepts no liability related to any default, damage, costs, or problem which may be based on or attributable to: (i) the use of the NVIDIA product in any manner that is contrary to this document or (ii) customer product designs.

No license, either expressed or implied, is granted under any NVIDIA patent right, copyright, or other NVIDIA intellectual property right under this document. Information published by NVIDIA regarding third-party products or services does not constitute a license from NVIDIA to use such products or services or a warranty or endorsement thereof. Use of such information may require a license from a third party under the patents or other intellectual property rights of the third party, or a license from NVIDIA under the patents or other intellectual property rights of NVIDIA.

Reproduction of information in this document is permissible only if approved in advance by NVIDIA in writing, reproduced without alteration and in full compliance with all applicable export laws and regulations, and accompanied by all associated conditions, limitations, and notices.

THIS DOCUMENT AND ALL NVIDIA DESIGN SPECIFICATIONS, REFERENCE BOARDS, FILES, DRAWINGS, DIAGNOSTICS, LISTS, AND OTHER DOCUMENTS (TOGETHER AND SEPARATELY, “MATERIALS”) ARE BEING PROVIDED “AS IS.” NVIDIA MAKES NO WARRANTIES, EXPRESSED, IMPLIED, STATUTORY, OR OTHERWISE WITH RESPECT TO THE MATERIALS, AND EXPRESSLY DISCLAIMS ALL IMPLIED WARRANTIES OF NONINFRINGEMENT, MERCHANTABILITY, AND FITNESS FOR A PARTICULAR PURPOSE. TO THE EXTENT NOT PROHIBITED BY LAW, IN NO EVENT WILL NVIDIA BE LIABLE FOR ANY DAMAGES, INCLUDING WITHOUT LIMITATION ANY DIRECT, INDIRECT, SPECIAL, INCIDENTAL, PUNITIVE, OR CONSEQUENTIAL DAMAGES, HOWEVER CAUSED AND REGARDLESS OF THE THEORY OF LIABILITY, ARISING OUT OF ANY USE OF THIS DOCUMENT, EVEN IF NVIDIA HAS BEEN ADVISED OF THE POSSIBILITY OF SUCH DAMAGES. Notwithstanding any damages that customer might incur for any reason whatsoever, NVIDIA’s aggregate and cumulative liability towards customer for the products described herein shall be limited in accordance with the Terms of Sale for the product.

Trademarks

NVIDIA, the NVIDIA logo, and Mellanox are trademarks and/or registered trademarks of NVIDIA Corporation and/or Mellanox Technologies Ltd. in the U.S. and in other countries. Other company and product names may be trademarks of the respective companies with which they are associated.



Copyright
© 2022 NVIDIA Corporation & affiliates. All Rights Reserved.

