200G QSFP-DD to 2x100G QSFP28 Passive Direct Attach Copper Breakout Cable



Application

- Data center & Networking Equipment
- Servers/Storage Devices
- High Performance Computing (HPC)
- Switches/Routers

Standards Compliance

- IEEE802.3Bj,By,IEEE802.3CD
- RoHS Compliant

Features

- Compliant with QSFP-DD MSA Specification Rev 3.4;
- SFF-8679 electrical interface compliant;
- SFF-8636 management interface support;
- Support 25G electrical data rates/channel;
- I2C for EEPROM communication; Pull to Release latch design;
- Excellent EMI/EMC performance 360 degree cable shield termination;
- Advantage dual side pre-solder automated assembly technologies;
- Low loss, stronger mechanical features, more flexible;
- QSFP-DD modules will be backwards compatible, allowing them to support existing QSFP modules and provide flexibility for end users and system designers

Description

In an effort to keep up with the demands of higher performance and increasing amounts of memory bus bandwidth, FS designers are working to revise, extend and update the solution. FS 200G QSFP-DD passive cable assembly can provide new generation performance of QSFP by higher date transfer rate. At the same time, FS QSFP-DD TO 2 QSFP28 cable choose dual side drain cable and self-designed PCBA, provide low loss，less skew and better NEXT. 360 degree EMI crimping shielding and Zinc Die-cast shell designing make the product high-performance. And all the designing is based on the industry standard specifications, such as SFF-8679, SFF-8636 and QSFP-DD TO 2 QSFP28 MSA specification rev 4.0.

Cable Assembly Characteristics

I. QSFP-DD TO 2QSFP28

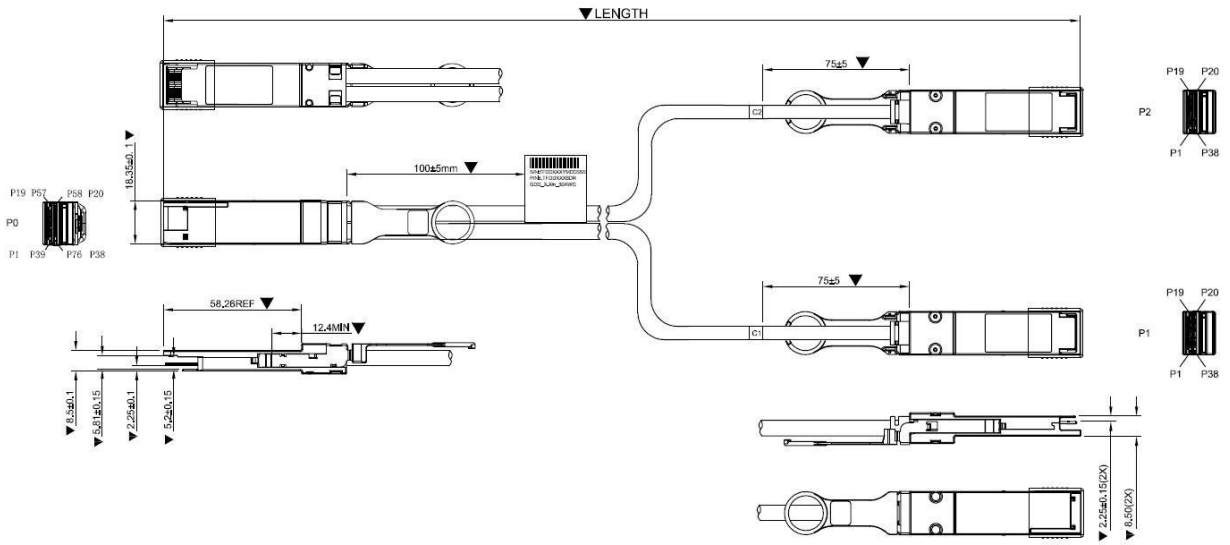

Figure 1 - QSFP-DD TO 2 QSFP28 Mechanical Structure

II. Mechanical Structure Characteristics Of Plug

1. Raw Cable -- Support 28~30AWG, 100ohm, Silver plated, vw-1, RoHS2.0.
2. PCB –High Speed Very low loss material M6,8 Layers Design; Gold finger plated gold 30u" min., nickel plated 150~700u"; pad: immersion gold 1u" min., nickel plated 100u"min. 94v-0, RoHS2.0;
3. Upper shell -- Zinc Die-cast, with Cu plated 280u" min. overall and Ni plated 120u" min.
4. Bottom shell -- Zinc Die-cast, with Cu plated 280u" min. overall and Ni plated 120u" min.
5. Latch-- Stainless steel ,SUS304 + PA66 CM3004,black;
6. Spring -- Stainless steel ,SUS301EH;
7. Rivet -- Stainless Steel, SUS304;
8. SR (Strain Relief) -- PVC, 45P, BLACK, RoHS2.0.
9. Dust Cover—PVC, 60P, Blue, ANTI-STATIC, RoHS2.0.

III. Electrical Design

The electrical design of the QSFP-DD TO 2 QSFP28 cable assembly is fully compliant to QSFP-DD TO 2 QSFP28 Hardware Rev4.0 specifications. The electrical design included: a low loss design printed circuit board, DC block capacitances in the Rx channel, and EEprom chips for the management. Pin layout and function definition are shown in Figure 2 and Table 1.

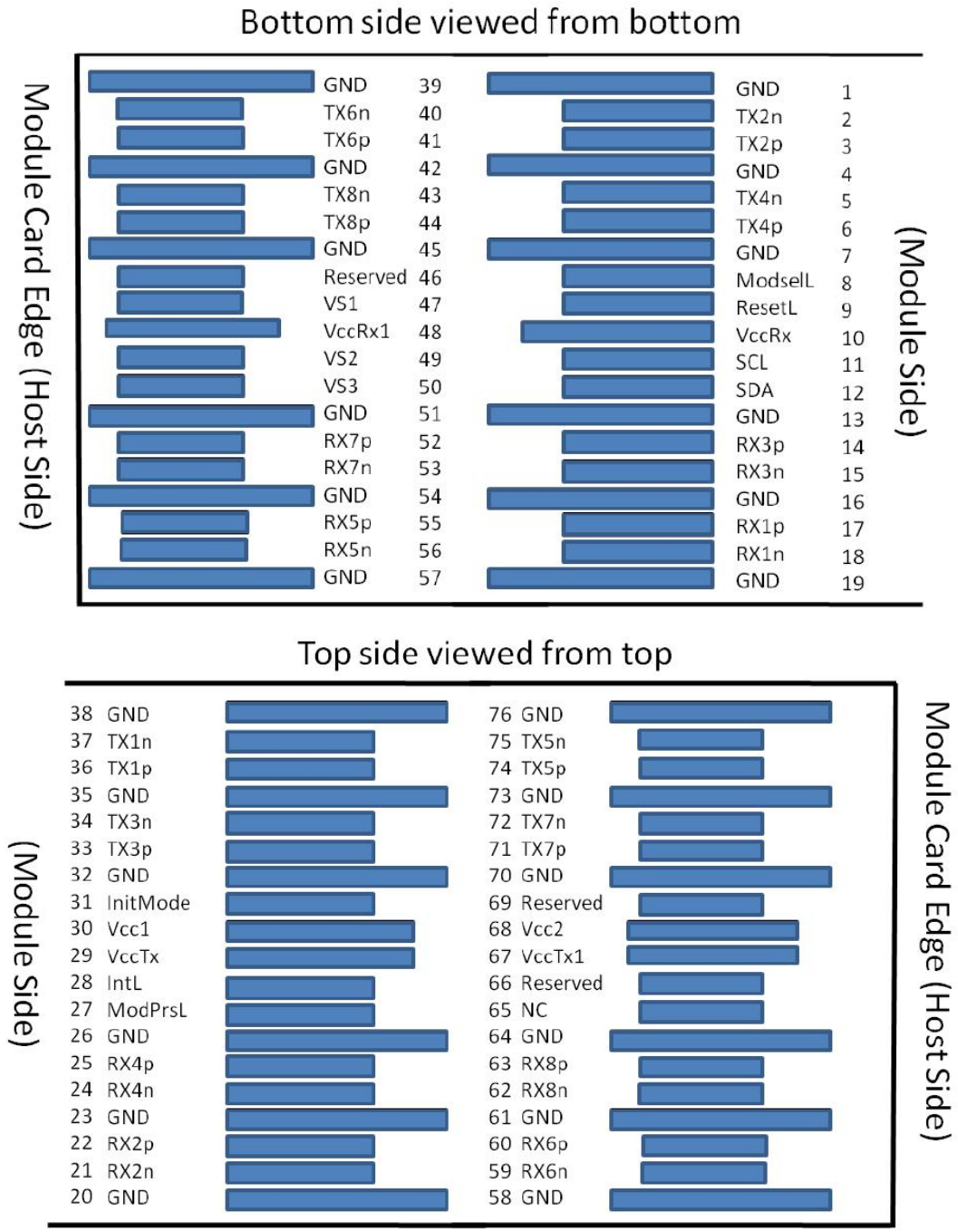

Figure 2 - QSFP-DD TO 2 QSFP Pin Define

Table 1 - QSFP-DD TO 2 QSFP28 Pin Function Definition

Pin	Logic	Symbol	Description	Notes
1		GND	Ground	1
2	CML-I	Tx2n	Transmitter Inverted Data Input	
3	CML-I	Tx2p	Transmitter Non-Inverted Data Input	
4		GND	Ground	1
5	CML-I	Tx4n	Transmitter Inverted Data Input	
6	CML-I	Tx4p	Transmitter Non-Inverted Data Input	
7		GND	Ground	1
8	LVTTL-I	ModSelL	Module Select	
9	LVTTL-I	ResetL	Module Reset	
10		VccRx	+3.3 V Power Supply Receiver	2
11	LVCMOS-I/O	SCL	2-wire serial interface clock	
12	LVCMOS-I/O	SDA	2-wire serial interface data	
13		GND	Ground	1
14	CML-O	Rx3p	Receiver Non-Inverted Data Output	
15	CML-O	Rx3n	Receiver Inverted Data Output	
16		GND	Ground	1
17	CML-O	Rx1p	Receiver Non-Inverted Data Output	
18	CML-O	Rx1n	Receiver Inverted Data Output	
19		GND	Ground	1
20		GND	Ground	1
21	CML-O	Rx2n	Receiver Inverted Data Output	
22	CML-O	Rx2p	Receiver Non-Inverted Data Output	
23		GND	Ground	1
24	CML-O	Rx4n	Receiver Inverted Data Output	

25	CML-O	Rx4p	Receiver Non-Inverted Data Output	
26		GND	Ground	1
27	LVTTL-O	ModPrsL	Module Present	
28	LVTTL-O	IntL	Interrupt	
29		VccTx	+3.3V Power supply transmitter	2
30		Vcc1	+3.3V Power supply	2
31	LVTTL-I	InitMode	Initialization mode; In legacy QSFP applications, the InitMode pad is called LPMODE	
32		GND	Ground	1
33	CML-I	Tx3p	Transmitter Non-Inverted Data Input	
34	CML-I	Tx3n	Transmitter Inverted Data Input	
35		GND	Ground	1
36	CML-I	Tx1p	Transmitter Non-Inverted Data Input	
37	CML-I	Tx1n	Transmitter Inverted Data Input	
38		GND	Ground	1
39		GND	Ground	1
40	CML-I	Tx6n	Transmitter Inverted Data Input	
41	CML-I	Tx6p	Transmitter Non-Inverted Data Input	
42		GND	Ground	1
43	CML-I	Tx8n	Transmitter Inverted Data Input	
44	CML-I	Tx8p	Transmitter Non-Inverted Data Input	
45		GND	Ground	1
46		Reserved	For future use	3
47		VS1	Module Vendor Specific 1	3
48		VccRx1	3.3V Power Supply	2

49		VS2	Module Vendor Specific 2	3
50		VS3	Module Vendor Specific 3	3
51		GND	Ground	1
52	CML-O	Rx7p	Receiver Non-Inverted Data Output	
53	CML-O	Rx7n	Receiver Inverted Data Output	
54		GND	Ground	1
55	CML-O	Rx5p	Receiver Non-Inverted Data Output	
56	CML-O	Rx5n	Receiver Inverted Data Output	
57		GND	Ground	1
58		GND	Ground	1
59	CML-O	Rx6n	Receiver Inverted Data Output	
60	CML-O	Rx6p	Receiver Non-Inverted Data Output	
61		GND	Ground	1
62	CML-O	Rx8n	Receiver Inverted Data Output	
63	CML-O	Rx8p	Receiver Non-Inverted Data Output	
64		GND	Ground	1
65		NC	No Connect	3
66		Reseved	For future use	3
67		VccTx1	3.3V Power Supply	2
68		Vcc2	3.3V Power Supply	2
69		Reseved	For future use	3
70		GND	Ground	1
71	CML-I	Tx7p	Transmitter Non-Inverted Data Input	

72	CML-I	Tx7n	Transmitter Inverted Data Input	
73		GND	Ground	1
74	CML-I	Tx5p	Transmitter Non-Inverted Data Input	
75	CML-I	Tx5n	Transmitter Inverted Data Input	
76		GND	Ground	1

Notes:

1. QSFP-DD TO 2 QSFP uses common ground (GND)for all signals and supply (power). All are common within the QSFP-DD TO 2 QSFP module and all module voltages are referenced to this potential unless otherwise noted. Connect these directly to the host board signal-common ground plane.
2. VccRx, VccRx1, Vcc1, Vcc2, VccTx and VccTx1 shall be applied concurrently. Requirements defined for the host side of the Host Card Edge Connector are listed in Table 6. VccRx, VccRx1, Vcc1, Vcc2, VccTx and VccTx1 may be internally connected within the module in any combination. The connector Vcc pins are each rated for a maximum current of 1000 mA.
3. All Vendor Specific, Reserved and No Connect pins may be terminated with 50 ohms to ground on the host. Pad 65 (No Connect) shall be left unconnected within the module. Vendor specific and Reserved pads shall have an impedance to GND that is greater than 10 kOhms and less than 100 pF.
4. Plug Sequence specifies the mating sequence of the host connector and module. The sequence is 1A, 2A, 3A, 1B, 2B, 3B. (see Figure 2 for pad locations) Contact sequence A will make, then break contact with additional QSFP-DD TO 2 QSFP pads. Sequence 1A, 1B will then occur simultaneously, followed by 2A, 2B, followed by 3A,3B.

IV. 2-Wires EEPROM Interface

The QSFP-DD TO 2 QSFP passive cable EEPROM is compliant with CMIS3.0 specification. Each connector contains a 256 bytes EEPROM at device address A0(h). The information for addresses 0 to 255 is listed below, see table 3. This information can be tailored to any customer request. Any address can be altered to display customer specific information.

Table 2 - QSFP-DD TO 2 QSFP EEPROM MAP

A0h address	Name	Value	Description
0	Identifier	18	Type of Serial Module -- See SFF-8024,19h:OSFP 8X Pluggable Transceiver
1	Version ID	30	the upper nibble is the whole number part and the lower nibble is the decimal part.Example: 21h indicates version 2.1.
2	Flat_mem	80	Upper memory flat or paged.0b=Paged memory 1b=Flat memory (only page 00h implemented)
	CLEI present		CLEI code present in upper page 00h
	Reserved		Reserved
	TWI Maximum speed		Indicates maximum two-wire serial speed supported by module 00b=Module supports up to 400 KHz 01b=Module supports up to 1 MHz 10b=Reserved 11b=Reserved
	Reserved		Reserved
3	Reserved	03	Reserved
	Module state		Current state of Module 001b:ModuleLowPwr state (Flat memory passive cable assemblies)
	Interrupt		Digital state of IntL Interrupt output signal 0b=IntL asserted 1b=IntL not asserted (default)
4~7	Bank 0 lane flag	00	Indicates that one or more of the flag bits from bank 0

8	Reserved	00	Reserved
	Module state changed flag		Indicates change of Module state
9~13	Module Interrupt Flags	00	Module Interrupt Flags
14~25	Module monitors	00	Module monitors Temperature MSB
26~30	Module Global Controls	00	ForceLowPwr,Software Reset,Custom
31~36	Module Level Flag Masks	00	Module Level Flag Masks
37~63	Reserved	00	Reserved
64~84	Custom	00	Custom
85	Module Type Encodings	03	00h:Undefined 01h:Optical Interfaces: MMF 02h:Optical interfaces: SMF 03h:Passive Cu 04h:Active Cable 005:Base-T
86	Module Host Electrical interface codes (ApSel:0001b)	1D	1A:100GBASE-CR4 NRZ 1D:400G CR8 PAM4
87	Module Media interface codes (ApSel:0001b)	01	01:Copper cable
88	Host/Media Lane Count (ApSel:0001b)	88	7-4:Host Lane Count 3-0:Media Lane Count
89	Lane Assignment (ApSel:0001b)	00	code 1:if application is allowed on a given host lane.bits0-7 correspond to host lanes 1-8
90	Module Host Electrical interface codes (ApSel:0010b)	00	Module Host-Media Interface Advertising Codes
91	Module Media interface codes (ApSel:0010b)	00	Module Host-Media Interface Advertising Codes
92	Host/Media Lane Count (ApSel:0010b)	00	Module Host-Media Interface Advertising Codes
93	Lane Assignment (ApSel:0010b)	00	Module Host-Media Interface Advertising Codes
94	Module Host Electrical interface codes (ApSel:0011b)	00	Module Host-Media Interface Advertising Codes
95	Module Media interface codes (ApSel:0011b)	00	Module Host-Media Interface Advertising Codes
96	Host/Media Lane Count (ApSel:0011b)	00	Module Host-Media Interface Advertising Codes
97	Lane Assignment (ApSel:0011b)	00	Module Host-Media Interface Advertising Codes

98	Module Host Electrical interface codes (ApSel:0100b)	00	Module Host-Media Interface Advertising Codes
99	Module Media interface codes (ApSel:0100b)	00	Module Host-Media Interface Advertising Codes
100	Host/Media Lane Count (ApSel:0100b)	00	Module Host-Media Interface Advertising Codes
101	Lane Assignment (ApSel:0100b)	00	Module Host-Media Interface Advertising Codes
102	Module Host Electrical interface codes (ApSel:0101b)	00	Module Host-Media Interface Advertising Codes
103	Module Media interface codes (ApSel:0101b)	00	Module Host-Media Interface Advertising Codes
104	Host/Media Lane Count (ApSel:0101b)	00	Module Host-Media Interface Advertising Codes
105	Lane Assignment (ApSel:0101b)	00	Module Host-Media Interface Advertising Codes
106	Module Host Electrical interface codes (ApSel:0110b)	00	Module Host-Media Interface Advertising Codes
107	Module Media interface codes (ApSel:0110b)	00	Module Host-Media Interface Advertising Codes
108	Host/Media Lane Count (ApSel:0110b)	00	Module Host-Media Interface Advertising Codes
109	Lane Assignment (ApSel:0110b)	00	Module Host-Media Interface Advertising Codes
110	Module Host Electrical interface codes (ApSel:0111b)	00	Module Host-Media Interface Advertising Codes
111	Module Media interface codes (ApSel:0111b)	00	Module Host-Media Interface Advertising Codes
112	Host/Media Lane Count (ApSel:0111b)	00	Module Host-Media Interface Advertising Codes
113	Lane Assignment (ApSel:0111b)	00	Module Host-Media Interface Advertising Codes
114	Module Host Electrical interface codes (ApSel:1000b)	00	Module Host-Media Interface Advertising Codes
115	Module Media interface codes (ApSel:1000b)	00	Module Host-Media Interface Advertising Codes
116	Host/Media Lane Count (ApSel:1000b)	00	Module Host-Media Interface Advertising Codes
117	Lane Assignment (ApSel:1000b)	00	Module Host-Media Interface Advertising Codes
118~125	Password Entry and Change	00	Password Entry and Change
126	Bank Select Byte	00	The module shall ignore the Bank Select byte if the Page Select byte is outside of the 10h to 1Fh range (inclusive).In this case the Bank Select byte shall revert to bank 0 and read/write operations shall be to bank 0.

127	Page Select Byte	00	Writing the value of a non-supported page shall not be accepted by the module. In such cases the Page Select byte shall revert to 0 and read/write operations shall be to upper page 00h.
128	Identifier	18	Identifier Type of Module
129~144	Vendor name	*	Vendor name(ASCII)
145	Vendor OUI	3C	Vendor IEEE company ID
146		18	
147		A0	
148~163	Vendor PN	*	Part number provided by vendor(ASCII)
164	Vendor rev	41	Vendor rev A
165		20	Vendor rev A
166~181	Vendor SN	*	Vendor Serial Number(ASCII)
182~189	Date code	*	Date code(ASCII)
190~199	CLEI code	00	Common Language Equipment Identification code
200	Module Card Power Class	00	000: Power class 1; 001: Power class 2 010: Power class 3; 011: Power class 4 100: Power class 5; 101: Power class 6 110: Power class 7; 111: Power class 8
201	Max Power	06	Maximum power consumption in multiples of 0.25 W rounded up to the next whole multiple of 0.25 W
202	Cable assembly Length Lenth multiplier field	*	Multiplier for value in bits 5-0. 00 = multiplier of .1 01 = multiplier of 1 10 = multiplier of 10 11 = multiplier of 100
	Cable assembly Length Base Length field		Link length base value. To calculate actual link length use multiplier in bits 7-6.
203	Media connector Type	23	Type of connector present in the module.See SFF-8024 for codes. 23h:Non-separable Connector

204	Copper cable Attenuation 5GHz	*	Passive copper cable attenuation at 5 GHz in 1 dB increments
205	Copper cable Attenuation 7GHz	*	Passive copper cable attenuation at 7 GHz in 1 dB increments
206	Copper cable Attenuation 12.89GHz	*	Passive copper cable attenuation at 12.89 GHz in 1 dB increments
207	Copper cable Attenuation 25.8GHz	*	Passive copper cable attenuation at 25.8 GHz in 1 dB increments
208	Reserved	00	Reserved
209	Reserved	00	Reserved
210	Near end implementation lane 8	00	0b=Lane 8 implemented in near end 1b=Lane 8 not implemented in near end
211	Reserved	02	Reserved
	Implemented lanes in far end		See Table 27 for config code of discrete far end connectors
212	Media interface technology	0A	0A: Copper cable unequalized
213~220	Reserved	00	Reserved
221	Custom	00	Custom
222	Checksum	*	Include bytes 128-221
223~251	User custom info NV	00	User custom info NV
252~255	User custom info NV	00	User custom info NV

V. Schematic

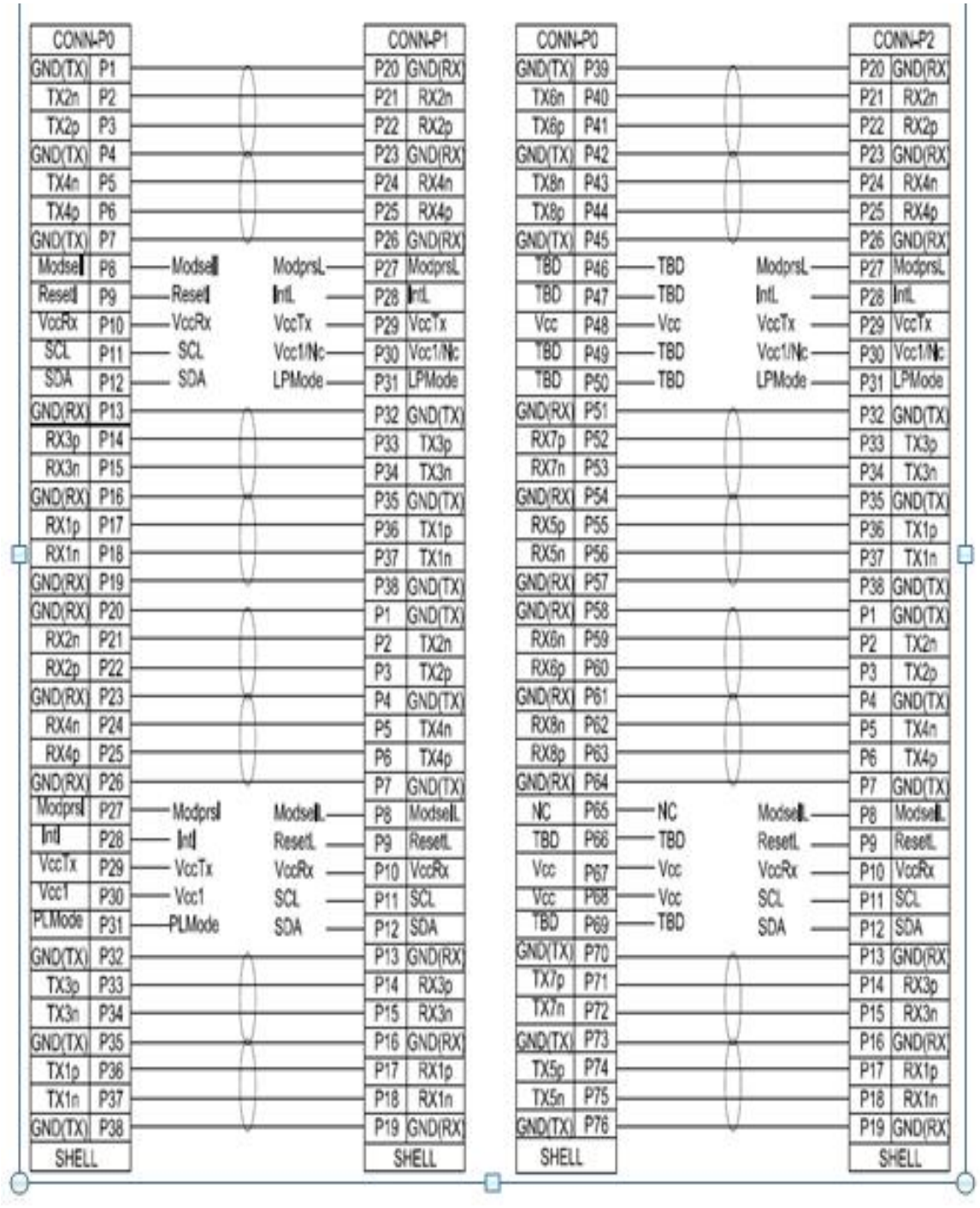
CONN-P0
GND(TX) P1
TX2n P2
TX2p P3
GND(TX) P4
TX4n P5
TX4p P6
GND(TX) P7
ModselL P8
ResetL P9
VccRx P10
SCL P11
SDA P12
GND(RX) P13
RX3p P14
RX3n P15
GND(RX) P16
RX1p P17
RX1n P18
GND(RX) P19
GND(RX) P20
RX2n P21
RX2p P22
GND(RX) P23
RX4n P24
RX4p P25
GND(RX) P26
ModprsL P27
IntL P28
VccTx P29
Vcc1 P30
PLMode P31
GND(TX) P32
TX3p P33
TX3n P34
GND(TX) P35
TX1p P36
TX1n P37
GND(TX) P38
SHELL
ModselL
ResetL
VccRx
SCL
SDA
ModprsL
IntL
VccTx
Vcc1/Nc
LPMode
CONN-P1
P20 GND(RX)
P21 RX2n
P22 RX2p
P23 GND(RX)
P24 RX4n
P25 RX4p
P26 GND(RX)
P27 ModprsL
P28 IntL
P29 VccTx
P30 Vcc1/Nc
P31 LPMode
P32 GND(TX)
P33 TX3p
P34 TX3n
P35 GND(TX)
P36 TX1p
P37 TX1n
P38 GND(TX)
P1 GND(TX)
P2 TX2n
P3 TX2p
P4 GND(TX)
P5 TX4n
P6 TX4p
P7 GND(TX)
P8 ModselL
P9 ResetL
P10 VccRx
P11 SCL
P12 SDA
P13 GND(RX)
P14 RX3p
P15 RX3n
P16 GND(RX)
P17 RX1p
P18 RX1n
P19 GND(RX)
SHELL
CONN-P0
GND(TX) P39
TX6n P40
TX6p P41
GND(TX) P42
TX8n P43
TX8p P44
GND(TX) P45
TBD P46
TBD P47
Vcc P48
TBD P49
TBD P50
GND(RX) P51
RX7p P52
RX7n P53
GND(RX) P54
RX5p P55
RX5n P56
GND(RX) P57
GND(RX) P58
RX6n P59
RX6p P60
GND(RX) P61
RX8n P62
RX8p P63
GND(RX) P64
NC P65
TBD P66
Vcc P67
Vcc P68
TBD P69
GND(TX) P70
TX7p P71
TX7n P72
GND(TX) P73
TX5p P74
TX5n P75
GND(TX) P76
SHELL
TBD
TBD
Vcc
TBD
TBD
NC
TBD
Vcc
Vcc
TBD
ModprsL
IntL
VccTx
Vcc1/Nc
LPMode
ModselL
ResetL
VccRx
SCL
SDA
CONN-P2
P20 GND(RX)
P21 RX2n
P22 RX2p
P23 GND(RX)
P24 RX4n
P25 RX4p
P26 GND(RX)
P27 ModprsL
P28 IntL
P29 VccTx
P30 Vcc1/Nc
P31 LPMode
P32 GND(TX)
P33 TX3p
P34 TX3n
P35 GND(TX)
P36 TX1p
P37 TX1n
P38 GND(TX)
P1 GND(TX)
P2 TX2n
P3 TX2p
P4 GND(TX)
P5 TX4n
P6 TX4p
P7 GND(TX)
P8 ModselL
P9 ResetL
P10 VccRx
P11 SCL
P12 SDA
P13 GND(RX)
P14 RX3p
P15 RX3n
P16 GND(RX)
P17 RX1p
P18 RX1n
P19 GND(RX)
SHELL

VI. Bulk Cable Characteristics

The structure of the cable is shown as the figure , the characteristics of the bulk cable are listed below.

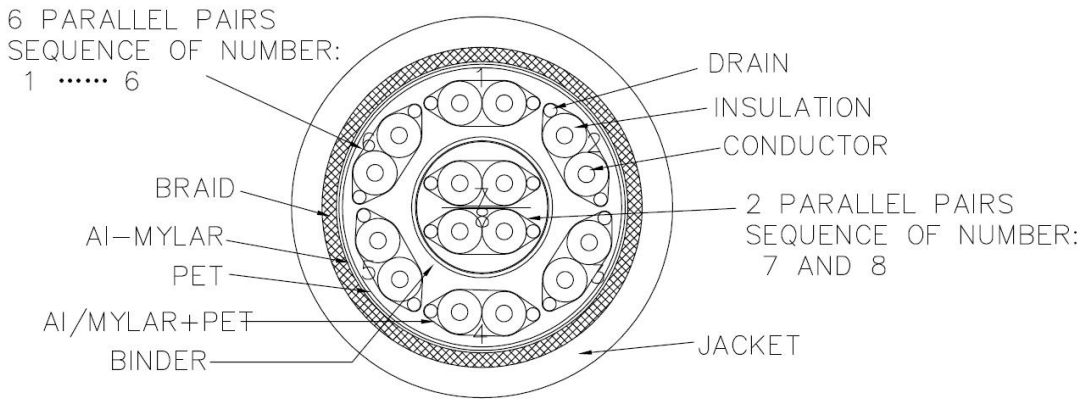

SECTIONAL DRAWING:

1.Voltage rating: 30V

2.Temperature rating: 80℃;

3.Impedance: Differential mode: 100 +5/-5 ohm @TDR;

4.Delay Skew(INTRA-SKEW): 30ps/5m max;

5.Signal Twin-ax pair cable: Solid Ag plated copper conductor;

6.Braid shielding coverage 85% min.

7.Jacket material: PVC

Test Center

FS.COM transceivers are tested to ensure connectivity and compatibility in our test center before shipped out. FS.COM test center is supported by a variety of mainstream original brand switches and groups of professional staff, helping our customers make the most efficient use of our products in their systems, network designs and deployments.

The original switches could be found nowhere but at FS.COM test center, eg: Juniper MX960 & EX 4300 series, Cisco Nexus 9396PX & Cisco ASR 9000 Series, HP 5900 Series & HP 5406R ZL2 V3(J9996A), Arista 7050S-64, Brocade ICX7750-26Q & ICX6610-48, Avaya VSP 7000 MDA 2, etc.



Cisco ASR 9000 Series(A9K-MPA-1X40GE)


ARISTA 7050S-64(DCS-7050S-64)



Juniper MX960


Brocade ICX 7750-26Q



Extreme Networks X670V VIM-40G4X



Mellanox M3601Q


Dell N4032F



HP 5406R ZL2 V3(J9996A)



AVAYA 7024XLS(7002QQ-MDA)

Test Assured Program

FS.COM truly understands the value of compatibility and interoperability to each optics. Every module FS.COM provides must run through programming and an extensive series of platform diagnostic tests to prove its performance and compatibility. In our test center, we care of every detail from staff to facilities—professionally trained staff, advanced test facilities and comprehensive original-brand switches, to ensure our customers to receive the optics with superior quality.



Our smart data system allows effective product management and quality control according to the unique serial number, properly tracing the order, shipment and every part.

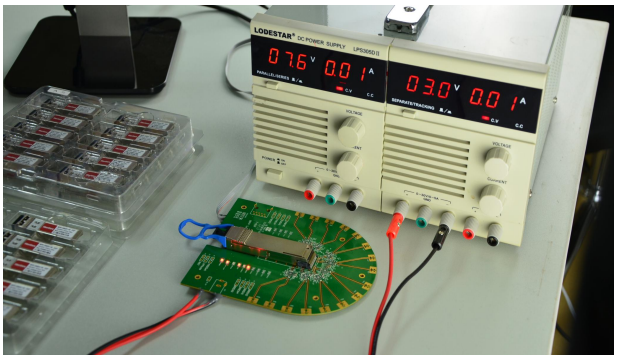

Our in-house coding facility programs all of our parts to standard OEM specs for compatibility on all major vendors and systems such as Cisco, Juniper, Brocade, HP, Dell, Arista and so on.



With a comprehensive line of original-brand switches, we can recreate an environment and test each optics in practical application to ensure quality and distance.



The last test assured step to ensure our products to be shipped with perfect package.

Order Information

Part Number	Data Rate	Length	Wire Gauge	Connector Type	Temp.Range	Cable Jacket
QDD-200G-2Q4xNPC005	Up to 200G	0.5m	AWG30	Passive Copper	0-70℃	PVC
QDD-200G-2Q4xNPC01	Up to 200G	1m	AWG30	Passive Copper	0-70℃	PVC
QDD-200G-2Q4xNPC02	Up to 200G	2m	AWG28	Passive Copper	0-70℃	PVC
QDD-200G-2Q4xNPC03	Up to 200G	3m	AWG28	Passive Copper	0-70℃	PVC