SN2000 Switch Systems Dismantling Guide

Table of Contents

Disassembling the System from the Rack 4

Part Numbers 5

SN2700 Part Numbers 5

SN2410 Part Numbers 5

SN2100 Part Numbers 6

SN2010 Part Numbers 7

SN2000 Dismantling Instructions 8

SN2700/SN2410 Systems Dismantling 8

SN2100/SN2010 Systems Dismantling 8

Component List 9

Components 9

Screws, Nuts and Washers 10

Component Illustrations 10

Disposal 15

Disposal Instructions 15

Selective Treatment Equipment 15

Document Revision History 16

⚠ This document is preliminary and subject to change.

This document is intended for use by end-of-life recyclers or treatment facilities. It provides instructions for the proper disassembly and disposal of the SN2000 switch systems specified below.

Disassembling the System from the Rack

Before referring to the dismantling instructions of the specific system family, remove the system from the rack:

1. Unplug and remove all connectors.
2. Unplug all power cords.
3. Remove the ground wire.
4. Unscrew the center bolts from the side of the system with the bracket.

   > Support the weight of the system when you remove the screws so that the system does not fall.

5. Slide the system from the rack.
6. Remove the rail slides from the rack.
7. Remove the caged nuts.

Part Numbers

SN2700 Part Numbers

For the Dismantling instructions of the SN2700 systems, see SN2700/SN2745/SN2410 Systems Dismantling.

OPN	Marketing Description
MSN2700-BS2F	NVIDIA Spectrum based 40GbE, 1U Open Ethernet Switch with NVIDIA Onyx (MLNX-OS), 32 QSFP28 ports, 2 Power Supplies (AC), x86 CPU, Standard depth, P2C airflow, Rail Kit, RoHS6
MSN2700-BS2FC	NVIDIA Spectrum 40GbE 1U switch w/Cumulus Linux, 32 QSFP28 ports, 2 AC PSUs, x86 2-core, standard depth, P2C airflow, Rail Kit, RoHS6, (Cumulus License Key is required)
MSN2700-BS2FO	NVIDIA Spectrum based 40GbE 1U Open Switch with ONIE, 32 QSFP28 ports, 2 Power Supplies (AC), Standard depth, x86 CPU, P2C airflow, Rail Kit, RoHS6
MSN2700-BS2R	NVIDIA Spectrum based 40GbE, 1U Open Ethernet Switch with NVIDIA Onyx (MLNX-OS), 32 QSFP28 ports, 2 Power Supplies (AC), x86 CPU, Standard depth, C2P airflow, Rail Kit, RoHS6
MSN2700-BS2RC	NVIDIA Spectrum 40GbE 1U switch w/Cumulus Linux, 32 QSFP28 ports, 2 AC PSUs, x86 2-core, standard depth, C2P airflow, Rail Kit, RoHS6, (Cumulus License Key is required)
MSN2700-CS2F	NVIDIA Spectrum based 100GbE, 1U Open Ethernet Switch with NVIDIA Onyx (MLNX-OS), 32 QSFP28 ports, 2 Power Supplies (AC), x86 CPU, Standard depth, P2C airflow, Rail Kit, RoHS6
MSN2700-CS2FC	NVIDIA Spectrum 100GbE 1U switch w/Cumulus Linux, 32 QSFP28 ports, 2 AC PSUs, x86 2-core, standard depth, P2C airflow, Rail Kit, RoHS6, (Cumulus License Key is required)
MSN2700-CS2FO	NVIDIA Spectrum based 100GbE 1U Open Switch with ONIE, 32 QSFP28 ports, 2 Power Supplies (AC), Standard depth, x86 CPU, P2C airflow, Rail Kit, RoHS6
MSN2700-CS2R	NVIDIA Spectrum based 100GbE, 1U Open Ethernet Switch with NVIDIA Onyx (MLNX-OS), 32 QSFP28 ports, 2 Power Supplies (AC), x86 CPU, Standard depth, C2P airflow, Rail Kit, RoHS6
MSN2700-CS2RC	NVIDIA Spectrum 100GbE 1U switch w/Cumulus Linux, 32 QSFP28 ports, 2 AC PSUs, x86 2-core, standard depth, C2P airflow, Rail Kit, RoHS6, (Cumulus License Key is required)
MSN2700-CS2RO	NVIDIA Spectrum based 100GbE 1U Open Ethernet switch with ONIE, 32 QSFP28 ports, 2 power supplies (AC), x86 CPU, standard depth, C2P airflow, Rail Kit
MSN2700-CBBFO	NVIDIA Spectrum based 100GbE, 1U Open Ethernet Switch with ONIE, 32 QSFP28 ports, 2 power-supplies (DC), x86 CPU, short depth, P2C airflow, Rail Kit

SN2410 Part Numbers

For the Dismantling instructions of the SN2410 systems, see SN2700/SN2745/SN2410 Systems Dismantling.

OPN	Marketing Description
MSN2410-BB2FC	NVIDIA Spectrum 10GbE/100GbE switch w/Cumulus Linux, 48 SFP28 ports + 8 QSFP28 ports, 2 AC PSUs, x86 2-core, short depth, P2C air flow, Rail Kit, (Cumulus License Key is required)
MSN2410-BB2FO	NVIDIA Spectrum based 10GbE/100GbE 1U Open Ethernet switch with ONIE, 48 SFP28 ports, 8 QSFP28 ports, 2 power supplies (AC), x86 dual core, Short depth, P2C airflow, Rail Kit, RoHS6

OPN	Marketing Description
MSN2410-BB2R	NVIDIA Spectrum based 10GbE/100GbE 1U Open Ethernet switch with NVIDIA Onyx (MLNX-OS), 48 SFP28 ports, 8 QSFP28 ports, 2 power supplies (AC), x86 dual core, Short depth, C2P airflow, Rail Kit, RoHS6
MSN2410-BB2RO	NVIDIA Spectrum based 10GbE/100GbE 1U Open Ethernet switch with ONIE, 48 SFP28 ports and 8 QSFP28 ports, 2 power supplies (AC), x86 CPU, short depth, C2P airflow, Rail Kit
MSN2410-BB2RC	NVIDIA Spectrum based 10GbE/100GbE 1U Open Ethernet switch with Cumulus Linux, 48 SFP28 ports and 8 QSFP28 ports, 2 power supplies (AC), x86 CPU, short depth, C2P airflow, Rail Kit
MSN2410-BBBFC	NVIDIA Spectrum based 10GbE/100GbE 1U Open Ethernet switch with Cumulus Linux, 48 SFP28 ports and 8 QSFP28 ports, 2 power supplies (DC), x86 CPU, short depth, P2C airflow, Rail Kit
MSN2410-CB2F	NVIDIA Spectrum based 25GbE/100GbE 1U Open Ethernet switch with NVIDIA Onyx (MLNX-OS), 48 SFP28 ports, 8 QSFP28 ports, 2 power supplies (AC), x86 dual core, Short depth, P2C airflow, Rail Kit, RoHS6
MSN2410-CB2FC	NVIDIA Spectrum 25GbE/100GbE switch w/Cumulus Linux, 48 SFP28 ports + 8 QSFP28 ports, 2 AC PSUs, x86 2 core, short depth, P2C air flow, Rail Kit, (Cumulus License Key is required)
MSN2410-CB2FO	NVIDIA Spectrum based 25GbE/100GbE 1U Open Ethernet switch with ONIE, 48 SFP28 ports, 8 QSFP28 ports, 2 power supplies (AC), x86 dual core, Short depth, P2C airflow, Rail Kit, RoHS6
MSN2410-CB2R	NVIDIA Spectrum based 25GbE/100GbE 1U Open Ethernet switch with NVIDIA Onyx (MLNX-OS), 48 SFP28 ports, 8 QSFP28 ports, 2 power supplies (AC), x86 dual core, Short depth, C2P airflow, Rail Kit, RoHS6
MSN2410-CB2RC	NVIDIA Spectrum 25GbE/100GbE switch w/Cumulus Linux, 48 SFP28 ports + 8 QSFP28 ports, 2 AC PSUs, x86 2 core, short depth, C2P air flow, Rail Kit, (Cumulus License Key is required)
MSN2410-CB2RO	NVIDIA Spectrum based 25GbE/100GbE 1U Open Ethernet switch with ONIE, 48 SFP28 ports, 8 QSFP28 ports, 2 power supplies (AC), x86 dual core, Short depth, C2P airflow, Rail Kit, RoHS6
MSN2410-CBBRC	NVIDIA Spectrum based 25GbE/100GbE 1U Open Ethernet switch with Cumulus Linux, 48 SFP28 ports and 8 QSFP28 ports, 2 power supplies (DC), x86 CPU, short depth, C2P airflow, Rail Kit

SN2100 Part Numbers

For the Dismantling instructions of the SN2100 systems, see SN2100/SN2010 Systems Dismantling.

OPN	Marketing Description
MSN2100-BB2FC	NVIDIA Spectrum 40GbE 1U switch w/Cumulus Linux, 16 QSFP28 ports, 2 AC PSUs, x86 2 core, short depth, P2C airflow, Rails to be purchased separately, (Cumulus License Key is required)
MSN2100-BB2FO	NVIDIA Spectrum based 40GbE 1U Open Switch with ONIE, 16 QSFP28 ports, 2 AC PSUs, x86 2-core, short depth, P2C airflow, Rail Kit must be purchased separately, RoHS6
MSN2100-BB2R	NVIDIA Spectrum based 40GbE, 1U Open Ethernet Switch with NVIDIA Onyx (MLNX-OS), 16 QSFP28 ports, 2 AC PSUs, x86 2-core, short depth, C2P airflow, Rail Kit must be purchased separately, RoHS6
MSN2100-BB2RC	NVIDIA Spectrum 40GbE 1U switch w/Cumulus Linux, 16 QSFP28 ports, 2 AC PSUs, x86 2-core, short depth, C2P airflow, Rails to be purchased separately, (Cumulus License Key is required)

OPN	Marketing Description
MSN2100-BB2RO	NVIDIA Spectrum based 40GbE 1U Open Ethernet switch with ONIE, 16 QSFP28 ports, 2 power supplies (AC), x86 CPU, short depth, C2P airflow. Rail Kit must be purchased separately
MSN2100-CB2F	NVIDIA Spectrum based 100GbE, 1U Open Ethernet Switch with NVIDIA Onyx (MLNX-OS), 16 QSFP28 ports, 2 AC PSUs, x86 2-core, short depth, P2C airflow, Rail Kit must be purchased separately, RoHS6
MSN2100-CB2FC	NVIDIA Spectrum 100GbE 1U switch w/Cumulus Linux, 16 QSFP28 ports, 2 AC PSUs, x86 2-core, short depth, P2C airflow, Rails to be purchased separately, (Cumulus License Key is required)
MSN2100-CB2FO	NVIDIA Spectrum based 100GbE 1U Open Switch with ONIE, 16 QSFP28 ports, 2 AC PSUs, x86 2-core, short depth, P2C airflow, Rail Kit must be purchased separately, RoHS6
MSN2100-CB2R	NVIDIA Spectrum based 100GbE, 1U Open Ethernet Switch with NVIDIA Onyx (MLNX-OS), 16 QSFP28 ports, 2 AC PSUs, x86 2-core, short depth, C2P airflow, Rail Kit must be purchased separately, RoHS6
MSN2100-CB2RC	NVIDIA Spectrum 100GbE 1U switch w/Cumulus Linux, 16 QSFP28 ports, 2 AC PSUs, x86 2-core, short depth, C2P airflow, Rails to be purchased separately, (Cumulus License Key is required)
MSN2100-CB2RO	NVIDIA Spectrum based 100GbE 1U Open Ethernet switch with ONIE, 16 QSFP28 ports, 2 power supplies (AC), x86 CPU, short depth, C2P airflow. Rail Kit must be purchased separately

SN2010 Part Numbers

For the Dismantling instructions of the SN2010 systems, see SN2100/SN2010 Systems Dismantling.

OPN	Marketing Description
MSN2010-CB2F	NVIDIA Spectrum-based 25GbE/100GbE, 1U Open Ethernet Switch with NVIDIA Onyx, 18 SFP28 and 4 QSFP28 ports, 2 Power Supplies (AC), short depth, x86 quad core, P2C airflow, Rail Kit must be purchased separately
MSN2010-CB2FC	NVIDIA Spectrum-based 25GbE/100GbE 1U switch w/Cumulus Linux, 18 SFP28 and 4 QSFP28 ports, 2 AC PSUs, x86 4-core, short depth, P2C airflow, Rails to be purchased separately, (Cumulus License is provided at no cost with purchase of SUP-SN2010-CL-XX)
MSN2010-CB2FO	NVIDIA Spectrum-based 25GbE/100GbE, 1U Open Ethernet Switch with ONIE, 18 SFP28 ports and 4 QSFP28 ports, 2 Power Supplies (AC), x86 quad core, short depth, P2C airflow, Rail Kit must be purchased separately
MSN2010-CB2R	NVIDIA Spectrum-based 25GbE/100GbE, 1U Open Ethernet Switch with NVIDIA Onyx, 18 SFP28 ports and 4 QSFP28 ports, 2 Power Supplies (AC), short depth, x86 quad core, C2P airflow, Rail Kit must be purchased separately
MSN2010-CB2RC	NVIDIA Spectrum-based 25GbE/100GbE 1U switch w/Cumulus Linux, 18 SFP28 and 4 QSFP28 ports, 2 AC PSUs, x86 4-core, short depth, C2P airflow, Rails to be purchased separately, (Cumulus License is provided at no cost with purchase of SUP-SN2010-CL-XX)
MSN2010- CB2RO	NVIDIA Spectrum based 25GbE/100GbE 1U Open Ethernet switch with ONIE, 18 SFP28 ports and 4 QSFP28 ports, 2 power supplies (AC), x86 CPU, short depth, C2P airflow. Rail Kit must be purchased separately

SN2000 Dismantling Instructions

SN2700/SN2410 Systems Dismantling

To dismantle the system, perform the following steps, while viewing the matching illustrations in the Component Illustrations table. To view the amounts of each component in your system, refer to the Component List below with the item number in the brackets. Once you are done dismantling all switch components, make sure you have all Screws, Nuts and Washers.

1. Cut all plastic cable ties (#15).
2. Remove all fan modules (#3) and power supply units (#4) by grasping their handles with your hand and pushing the latch release with your thumb while pulling the handle outward.
3. Unscrew all screws securing the chassis top cover, and remove it.
4. If there are **cable clamps** (#16), remove all of them.
5. Disconnect the following cables and harnesses from both sides, and remove them:
    a. **DC 2x3 F-F cable** (#19)
    b. **Mini-SAS cable** (#21)
    c. Flex PCB (#12)
6. Unscrew and remove the I-O module (#11) assembly.
7. Remove all **switch board cover stoppers** (#17).
8. Remove the management board cover stoppers (#18).
9. Snap the pull-tab (#24) out of its slot in the front panel.
10. Unscrew all screws securing the connector panel (#1) to the chassis, and remove it.
11. Remove all air-buffers (#23).
12. Unscrew all screws securing the switch board (#7) to the chassis, and remove it, as well as all switch board spacers (#13).
13. Remove all PSU extenders (#8) and extender spacers (#14).
14. Unscrew all screws securing the management board (#6) to the chassis, and remove it.

SN2100/SN2010 Systems Dismantling

To dismantle the system, perform the following steps, while viewing the matching illustrations in the Component Illustrations table. To view the amounts of each component in your system, refer to the Component List below with the item number in the brackets:

1. Unscrew all screws securing the chassis top cover, and remove it.
2. Snap the pull-tab (#24) out of its slot in the front panel.
3. Cut all plastic cable ties **(#15)**.
4. Disconnect the fan harnesses from the main board, and remove the fan assembly (#3).
5. Disconnect the following cables and harnesses from both sides, and remove them:
    a. Power harnesses **(#5)** from the power supplies to the switch board.
    b. **Signal harnesses** (#10) from the power supplies to the switch board.
    c. AC inlets to power supply harnesses (#9).
6. Remove the two AC inlets from their designated places
7. Unscrew all screws securing the power supplies **(#4)**, and remove them.
8. Unscrew all screws securing the management board (#6) to the chassis, and remove it.

9. Unscrew all screws securing the **switch board** (#7) to the chassis, and remove it.
10. In SN2010 systems only:
    a. Remove the LED divider and the LED board PCB (#2) by unscrewing all screws attaching it to the chassis.
    b. Detach the Lexan label (#22) from the front panel by peeling the plastic strip.

Component List

Components

#	Component	SN2700M	SN2410M	SN2100M	SN2010M
1.	Connector panel assembly	1	1	1	1
2.	LED board PCB	-	-	1	-
3.	Fan modules/drawers	4	4	1	1
4.	Power supply units	2	2	2	2
5.	Power supply to switch board harness	-	-	1 left 1 right	2 long 2 short
6.	Management board/X86 board	1	1	1	1
7.	Switch board	1	1	1	1
8.	Power supply unit extenders	2	2	-	-
9.	AC inlet to power supply harness	-	-	2	2
10.	Signal harness from switch board to power supply	-	-	2	2
11.	I-O module	1	1	-	-
12.	SE flex PCB	1	1	-	-
13.	Switch board spacers	12	10	-	-
14.	PSU extender spacers	2	2	-	-
15.	Cable ties	6	1	9	9
16.	Cable clamps	2	-	-	-
17.	Switch board cover stoppers	3	4	-	-
18.	Management board cover stoppers	1	1	-	-
19.	DC cable between management board and switch board	1	1	-	-
20.	LED divider	-	-	1	-
21.	Mini-SAS cable	1	1	-	-
22.	Front Lexan label	4	-	-	-
23.	Air buffers	4	-	-	-
24.	Pull-tab	1	1	1	1

Screws, Nuts and Washers

#	Component	SN2700	SN2410	SN2100	SN2010
a.	Pan head 4-40x5/16" double washer Phillips sems screw	13	15	-	-
b.	Pan head 4-40x3/8" double washer Phillips sems screw	13	6		7
c.	Flat head 100° 4-40x3/16" Phillips patch screw	35	27	16	17
d.	Flat head 100° 4-40x5/32" Phillips patch screw	2	-	-	-
e.	Flat head 100° 2-56 x 1/8 Phillips patch screw 1	-	1	-	-
f.	Pan head 2-56x1/4" double washer Philips sems screw	-	-	2	-
g.	Hexagon #8-32 nut	-	-	2	2
h.	Serrated lock washer (DIN 6798 A)	-	-	4	4
i.	Pan head m3x8 Phillips machine screw (DIN 7985-H)	-	-	7	
j.	Pan head m3x6 Phillips double washer sems screw	-	-	8	4
k.	Pan head m3x5 Phillips double washer sems screw	-	-	4	-
l.	Pan head m3x8 Phillips double washer sems screw	-	-	-	12
m.	Pan head 6-32 unc 1/4" Phillips double washer sems screw	-	-	-	4

Component Illustrations

⚠ Note: The images in the following table are provided for illustration purposes only. The components may slightly vary, depending on the system's family and specific model.

#	Component	#	
1.	Connector panel assembly: 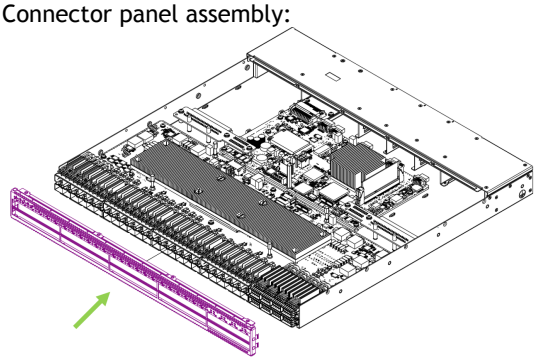	2.	LED board PCB: 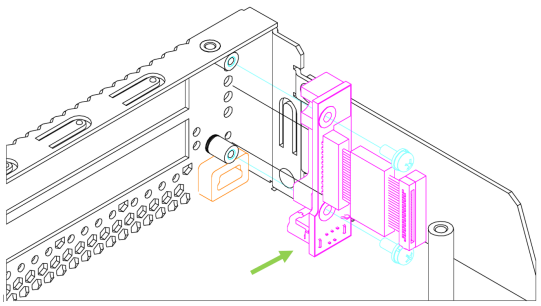

#	Component	#	
3.	Fan modules/drawers: 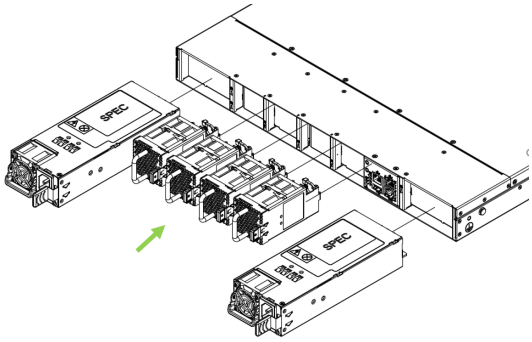 Fan assembly: 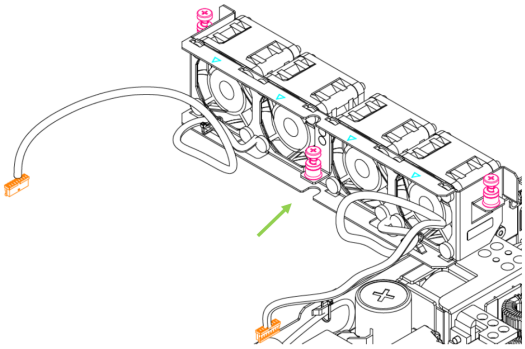	4.	Power supply units: 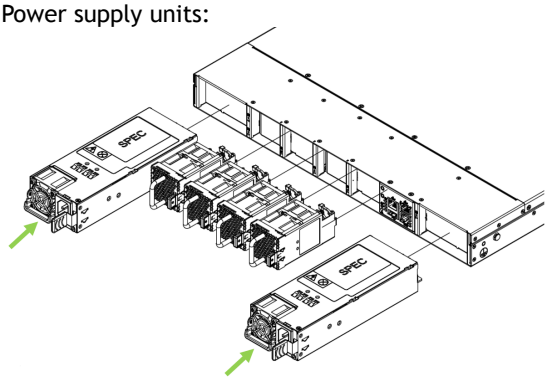 Power supply (internal): 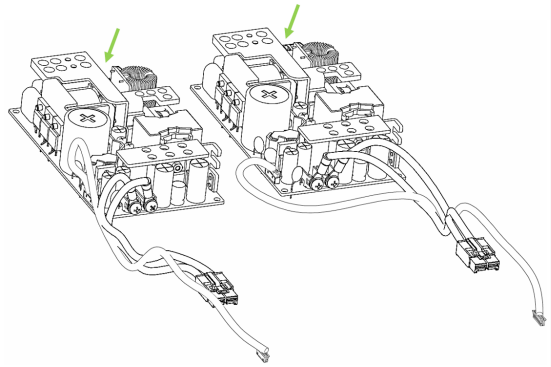
5.	Power supply to main board harness: 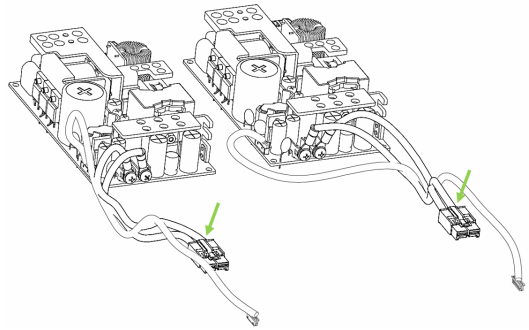	6.	Management board/X86 board: 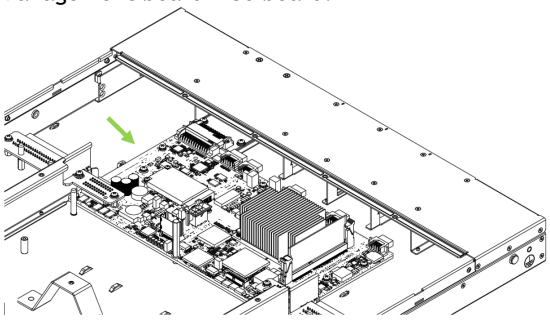
7.	Switch board: 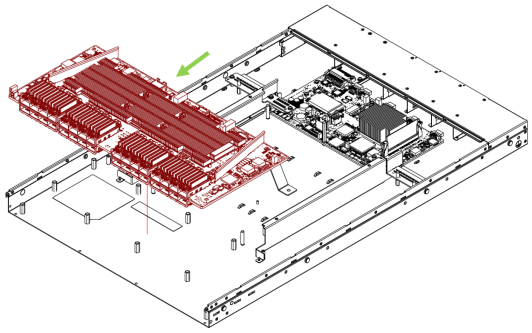	8.	Power supply unit extenders: 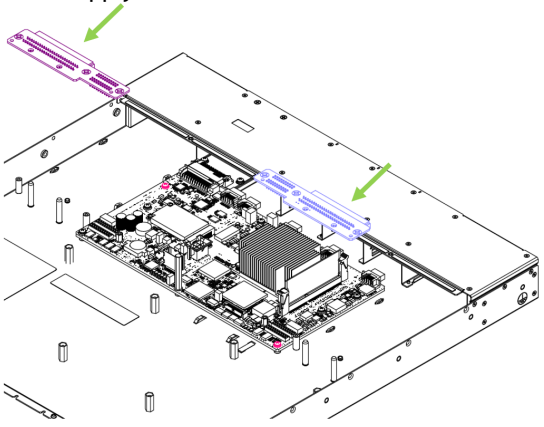

#	Component	#	
9.	AC inlet to power supply harness: 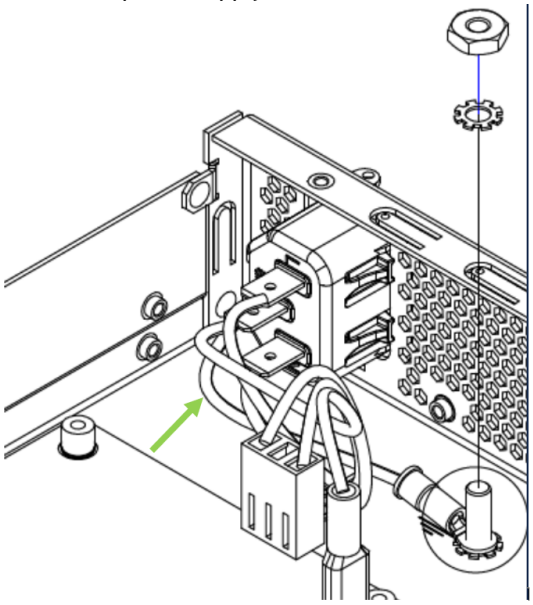	10.	Signal harness (from switch board to power supply): 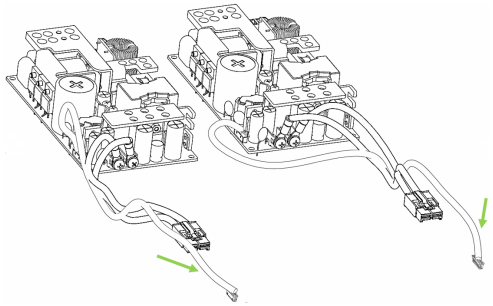
11.	I-O module: 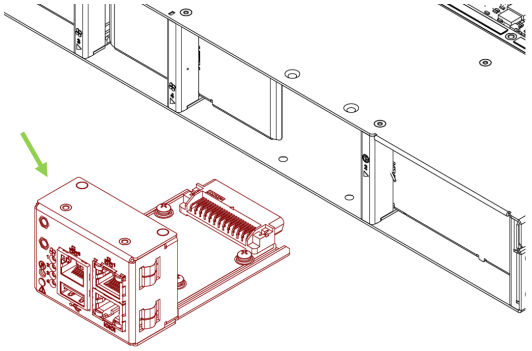	12.	SE flex PCB: 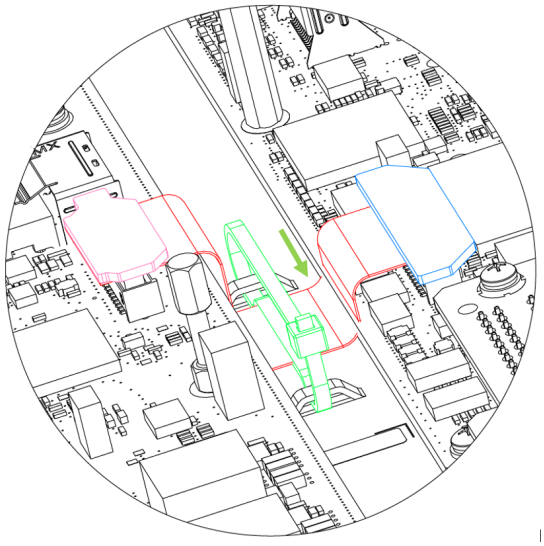

#	Component	#	
13.	Switch board spacers: 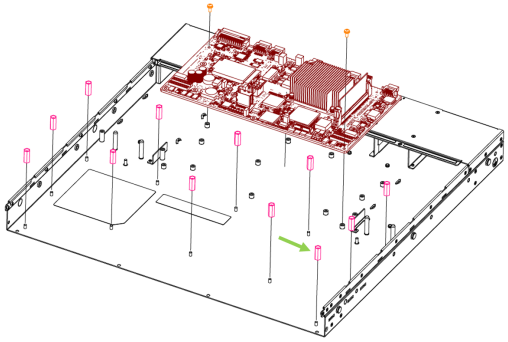	14.	PSU extender spacers: 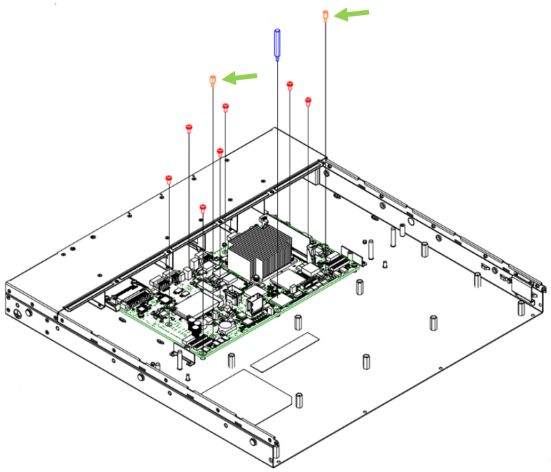
15.	Cable ties: 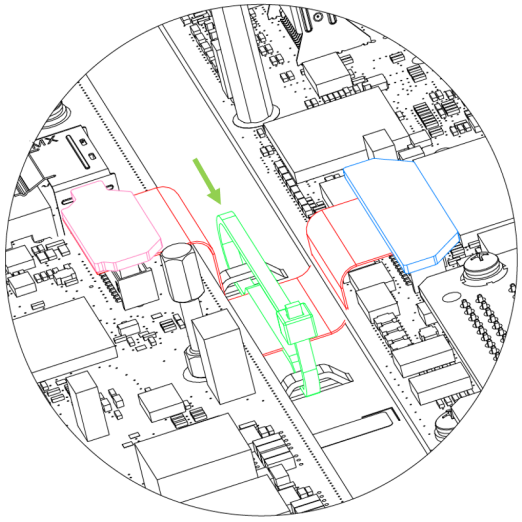	16.	Cable clamps: 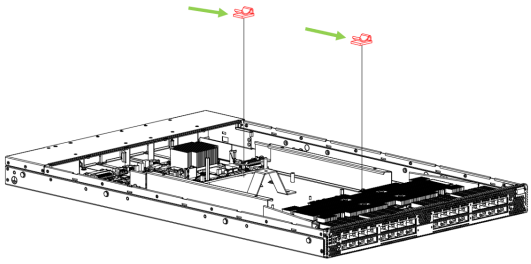
17.	Switch board cover stopper: 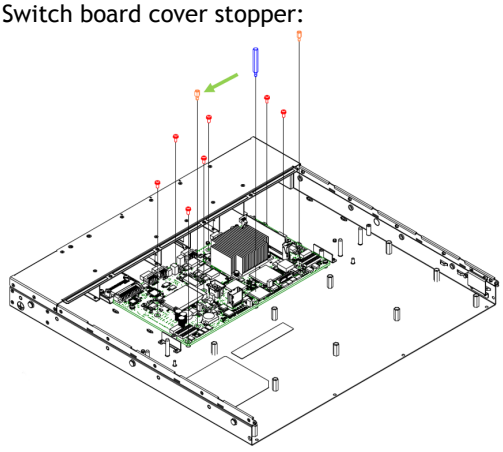	18.	Management board cover stopper: 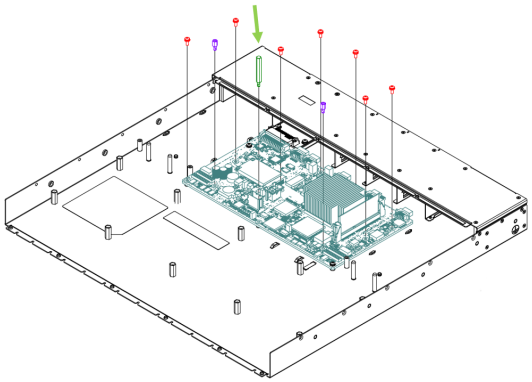

#	Component	#	
19.	DC cable between management board and switch board: 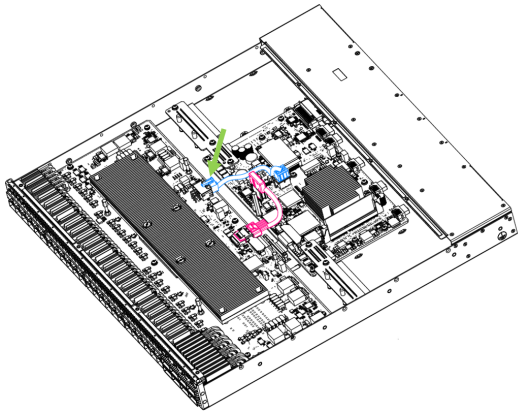	20.	LED divider: 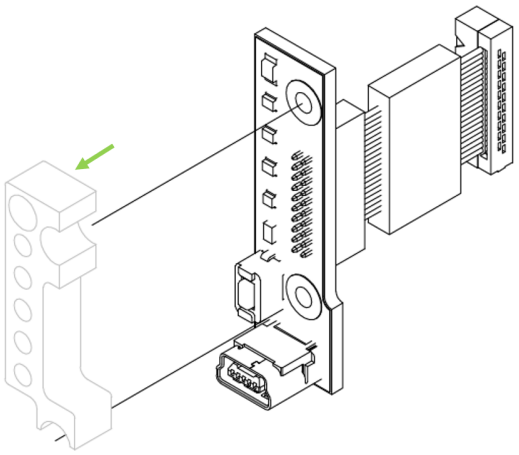
21.	Mini-SAS cable: 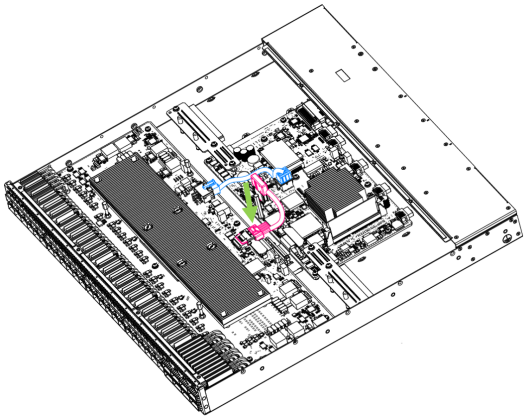	22.	Lexan label: 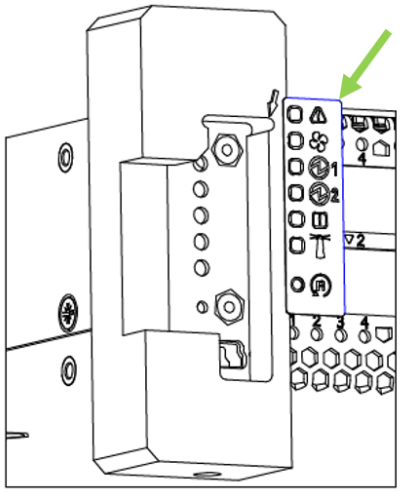
23.	Air buffers: 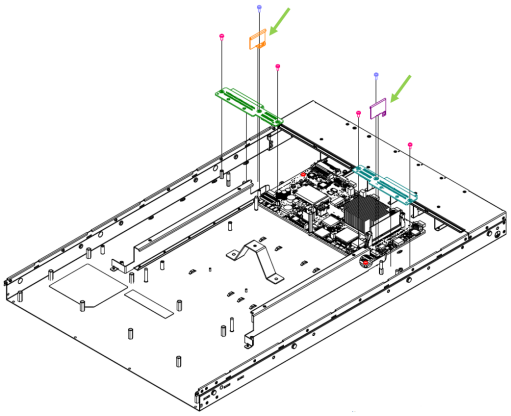	24.	Pull-tab: 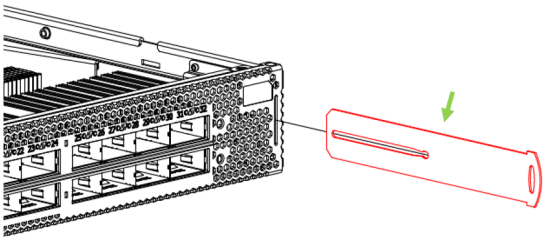

Disposal

Disposal Instructions

According to the WEEE Directive 2002/96/EC, all waste electrical and electronic equipment (EEE) should be collected separately and not disposed of with regular household waste. Dispose of this product and all of its parts in a responsible and environmentally friendly way.



Selective Treatment Equipment

For a list of materials and components of waste electrical and electronic equipment for selective treatment, please refer to Article 6(1) and Annex II of the EU WEEE Directive.

Document Revision History

Date	Revision	Description
May 2020	1.0	Initial revision.

Notice

This document is provided for information purposes only and shall not be regarded as a warranty of a certain functionality, condition, or quality of a product. Neither NVIDIA Corporation nor any of its direct or indirect subsidiaries and affiliates (collectively: “NVIDIA”) make any representations or warranties, expressed or implied, as to the accuracy or completeness of the information contained in this document and assumes no responsibility for any errors contained herein. NVIDIA shall have no liability for the consequences or use of such information or for any infringement of patents or other rights of third parties that may result from its use. This document is not a commitment to develop, release, or deliver any Material (defined below), code, or functionality.

NVIDIA reserves the right to make corrections, modifications, enhancements, improvements, and any other changes to this document, at any time without notice.

Customer should obtain the latest relevant information before placing orders and should verify that such information is current and complete.

NVIDIA products are sold subject to the NVIDIA standard terms and conditions of sale supplied at the time of order acknowledgement, unless otherwise agreed in an individual sales agreement signed by authorized representatives of NVIDIA and customer (“Terms of Sale”). NVIDIA hereby expressly objects to applying any customer general terms and conditions with regards to the purchase of the NVIDIA product referenced in this document. No contractual obligations are formed either directly or indirectly by this document.

NVIDIA products are not designed, authorized, or warranted to be suitable for use in medical, military, aircraft, space, or life support equipment, nor in applications where failure or malfunction of the NVIDIA product can reasonably be expected to result in personal injury, death, or property or environmental damage. NVIDIA accepts no liability for inclusion and/or use of NVIDIA products in such equipment or applications and therefore such inclusion and/or use is at customer’s own risk.

NVIDIA makes no representation or warranty that products based on this document will be suitable for any specified use. Testing of all parameters of each product is not necessarily performed by NVIDIA. It is customer’s sole responsibility to evaluate and determine the applicability of any information contained in this document, ensure the product is suitable and fit for the application planned by customer, and perform the necessary testing for the application in order to avoid a default of the application or the product. Weaknesses in customer’s product designs may affect the quality and reliability of the NVIDIA product and may result in additional or different conditions and/or requirements beyond those contained in this document. NVIDIA accepts no liability related to any default, damage, costs, or problem which may be based on or attributable to: (i) the use of the NVIDIA product in any manner that is contrary to this document or (ii) customer product designs.

No license, either expressed or implied, is granted under any NVIDIA patent right, copyright, or other NVIDIA intellectual property right under this document. Information published by NVIDIA regarding third-party products or services does not constitute a license from NVIDIA to use such products or services or a warranty or endorsement thereof. Use of such information may require a license from a third party under the patents or other intellectual property rights of the third party, or a license from NVIDIA under the patents or other intellectual property rights of NVIDIA.

Reproduction of information in this document is permissible only if approved in advance by NVIDIA in writing, reproduced without alteration and in full compliance with all applicable export laws and regulations, and accompanied by all associated conditions, limitations, and notices.

THIS DOCUMENT AND ALL NVIDIA DESIGN SPECIFICATIONS, REFERENCE BOARDS, FILES, DRAWINGS, DIAGNOSTICS, LISTS, AND OTHER DOCUMENTS (TOGETHER AND SEPARATELY, “MATERIALS”) ARE BEING PROVIDED “AS IS.” NVIDIA MAKES NO WARRANTIES, EXPRESSED, IMPLIED, STATUTORY, OR OTHERWISE WITH RESPECT TO THE MATERIALS, AND EXPRESSLY DISCLAIMS ALL IMPLIED WARRANTIES OF NONINFRINGEMENT, MERCHANTABILITY, AND FITNESS FOR A PARTICULAR PURPOSE. TO THE EXTENT NOT PROHIBITED BY LAW, IN NO EVENT WILL NVIDIA BE LIABLE FOR ANY DAMAGES, INCLUDING WITHOUT LIMITATION ANY DIRECT, INDIRECT, SPECIAL, INCIDENTAL, PUNITIVE, OR CONSEQUENTIAL DAMAGES, HOWEVER CAUSED AND REGARDLESS OF THE THEORY OF LIABILITY, ARISING OUT OF ANY USE OF THIS DOCUMENT, EVEN IF NVIDIA HAS BEEN ADVISED OF THE POSSIBILITY OF SUCH DAMAGES. Notwithstanding any damages that customer might incur for any reason whatsoever, NVIDIA’s aggregate and cumulative liability towards customer for the products described herein shall be limited in accordance with the Terms of Sale for the product.

Trademarks

NVIDIA, the NVIDIA logo, and Mellanox are trademarks and/or registered trademarks of NVIDIA Corporation and/or Mellanox Technologies Ltd. in the U.S. and in other countries. Other company and product names may be trademarks of the respective companies with which they are associated.



Copyright
© 2022 NVIDIA Corporation & affiliates. All Rights Reserved.

