POSTEK

RUGGED PARTS, DURABLE MACHINES

User's Manual

C168 Series

Barcode Label Printer



FCC Notice

This device complies with Part 15 of the FCC Rules. Operation is subject to the following two conditions: (1) this device may not cause harmful interference, and (2) this device must accept any interference received, including interference that may cause undesired operation.

This equipment may generate, use and/or radiate radio frequency energy. If not installed and used in full accordance with this User's Manual, interference to radio communications may occur. This equipment complies with the limits for a Class A Information Technology Equipment pursuant to Part 15 of the FCC Rules, which are designed to provide reasonable protection against such interference when operated in a commercial environment. Operation of this equipment in a residential area may also cause interference. In such case the user, at his/her expense, will be required to correct the interference using whatever means necessary.

Trademarks

POSTEK is a registered trademark by POSTEK Electronics Co., Ltd.
ARM is a registered trademark of Advanced RISC Machines Ltd.
Microsoft, Windows are registered trademarks of Microsoft Corporation.

Copyright

© 2021 by Postek Electronics Co., Ltd. All rights reserved. Under the copyright laws, this manual cannot be reproduced in any form without the prior written permission of POSTEK. No patent liability is assumed, with respect to the use of the information contained herein.

Disclaimer

POSTEK barcode/RFID printers are developed and produced by Postek Electronics Co., Ltd (hereinafter as "POSTEK") with the adoption of direct thermal/thermal transfer printing and RFID encoding techniques. For thermal transfer printing, matching ribbons and media are required. Meanwhile, the wide variety of RFID chip and antenna designs make it difficult to guarantee RFID tag's 100% compatibility with POSTEK printers, to satisfy your printing needs, please consult with the local reseller(s) to choose the matching consumables for POSTEK printers.

This manual has been validated and reviewed for accuracy. The instructions and descriptions it contains are accurate for the POSTEK printer at the time of this manual's distribution. However, succeeding printers and manuals are subject to change without notice. POSTEK assumes no liability for damages incurred directly or indirectly from errors, omissions or discrepancies between the printer and this manual.

To protect your interest, and to prevent loss due to improper handling, please read the

corresponding user’s manual before operation, and don't use the printer during abnormal conditions. In no event shall POSTEK be liable for any damage or loss caused by human misoperation, including but not limited to loss of business profits, business interruption, loss of business information, or other pecuniary loss.

Although this manual describes and details many issues which could possibly occur, the manufacturer cannot warrant against unpredictable conditions during the printer’s application. For problems such as the printer not working, missed or unclear print content, etc., POSTEK and/or its resellers are responsible for troubleshooting (according to POSTEK Warranty Clauses). In no event shall POSTEK or the resellers involved be liable for any direct or indirect loss, including but not limited to loss of business profits, business interruption, loss of business information, or other pecuniary loss.

Important Safety Instructions

- Only qualified and trained service technicians should attempt to repair the printer.
- Do not place the printer on or near a heat source.
- Be sure that the output of the power adapter is 24VDC and your power source matches the rating listed on the power adapter. Be certain your power source is grounded.
- To avoid getting an electric shock, do not use a worn or damaged power cord. If the power cord becomes damaged or frayed, replace it immediately.
- Do not insert anything into the ventilation slots or openings on the printer.
- The printer and power adapter should never be operated in a location where either one can get wet. Personal injury may result.
- The printhead becomes hot while printing. To protect from damaging the printhead and risk of personal injury, avoid touching the printhead.
- To get increased printhead longevity and higher quality printouts, always use approved labels, tags and thermal transfer ribbons. Approved supplies can be ordered from your Postek authorized reseller.
- Static electricity that accumulates on the surface of the human body or other surfaces can damage or destroy the printhead or electronic components in this device. DO NOT touch the printhead or the electronic components with bare hands.
- Place the printer on a flat, firm, solid surface.
- Never operate in a high temperature environment.
- Turn off the power when not in use for extended periods.
- Follow all recommendations and setup instructions included in this manual.

Contents

Preface 1

Important Notes 2

Chapter 1: Introduction 4

1.1 Specifications 4
1.2 Contents in the Box 5

Chapter 2: Setup and Use 6

2.1 Main Parts and Structures 6
2.1.1 Front View 6
2.1.2 Internal View 7
2.1.3 Rear View 8
2.2 Setting up the Printer 9
2.2.1 Interface Connection 9
2.2.2 Connecting the Printer 9
2.2.3 Loading the Ribbon 10
2.2.4 Loading the Media 14
2.3 Using the External Media Stand 17
2.4 Adjusting the Position of Media Sensor 22

Chapter 3: Operations and Settings 25

3.1 Basic Operations 25
3.1.1 Power Switch 25
3.1.2 The Front Panel 25
3.1.3 Advanced Functions 27
3.1.4 DIP Switches 28
3.1.5 Setting Operation Mode 29
3.2 Installing Windows Driver and Label Editing Software 32

Chapter 4: Maintenance 33

4.1 Cleaning the Printhead 33
4.2 Cleaning the Platen Roller 33
4.3 Cleaning the Printer Interior 34
4.4 Cleaning the Sensors 34

Chapter 5: Troubleshooting 35

5.1 LED Error Indication 35
5.2 Miscellaneous Issues 36

Appendix A: Interface Specifications 37

Appendix B: ASCII Table 38

Preface

Your POSTEK C168 Series compact barcode label printer features innovative technology and superior quality workmanship. Boasting a rigid structure, a highly reliable motor and transmission system, and a large ribbon capacity of 360M, users enjoy minimal downtime and low service cost. With intuitive operations, the C168 is ideal for a wide range of applications.

This manual explains how to set up and begin using your C168 Series printer. It also provides detailed information on configuring your printer, basic operations, care and troubleshooting.

Please read this manual carefully before using the POSTEK C168 Series printer.

Symbol Conventions

The symbols that may be found in this document are defined as follows.

Symbol	Description
WARNING	Alerts you to a medium or low risk hazard that could, if not avoided, result in moderate or minor injury.
CAUTION	Alerts you to a potentially hazardous situation that could, if not avoided, result in equipment damage, data loss, performance deterioration, or unanticipated results.
NOTE	Provides additional information to emphasize or supplement important points in the main text.

Version

Version 1.2, published in August, 2021.

Important Notes

Please read the following passages thoroughly before proceeding.

Printhead

The thermal printhead can be easily damaged due to its precision construction. A printhead damaged by misuse is not covered under the terms of the warranty. To ensure longevity of the printhead, please note the following:

- DO NOT scrape or use tools that might damage the printhead surface.
- To protect from corroding the printhead, DO NOT touch the printhead with bare hands.
- DO NOT use thermal paper or thermal transfer ribbons which contain Na, K or Cl.
- Keep printhead from any form of liquid or dampness.
- Only use a cotton swab dipped in anhydrous isopropyl alcohol to clean the printhead.
- Always use high-quality consumables:
  - When the printhead module is closed, pressure is placed directly onto the printhead; dirt such as paper scraps, sand, dust and glue can scrape or damage the printhead.
  - The printhead is also easily damaged by static electricity, which may be generated by poor quality ribbons.
- Always inspect consumables for high quality before purchasing.

CAUTION

The C168 Series printer functions under Direct Thermal or Thermal Transfer print modes. Thermal Transfer is set as the factory default (requires ribbon for printing). However, if you need to print on Direct Thermal materials (ribbon is not required), please contact your printer supplier or service provider to reduce the printhead pressure. This can protect your printhead from early performance deterioration due to direct contact with the thermal media. Any physical printhead damage caused by direct thermal printing is not covered under warranty.

Cutter (Optional)

The printer equipped with a cutter can automatically cut the label after printing. However, automatic cutters pose a safety hazard since the blades are very sharp. To prevent injuries and cutter failures while using one of the many types of automatic cutters, please follow the safety and maintenance rules listed below:

- Before using the cutter, be sure you have been trained by a qualified individual. A written procedure covering the cutter's use is recommended.

- It is very important to choose the right cutter model for the application to ensure personal safety and prevent damage to the cutter caused by cutting wrong types of media.
- Keep loose items such as long hair, clothing, jewelry, away from the cutter.
- Don't put anything except print media inside the cutter.
- Turn off power of printer if you notice abnormality with the cutting process and alert a qualified technician to resolve the issue.
- Never cut a print media which exceeds the maximum operating conditions of the cutter.
- Not every cutter model is designed to be able to cut through adhesive. Use only the dedicated cutters to cut through adhesive materials. Even so, regular cleaning is required to remove the adhesive built up on the blades over time to prevent cutter jam.
- Routine inspection and maintenance are required to be performed by a qualified technician to keep the cutter in good working conditions.

Chapter 1: Introduction

1.1 Specifications

Model by Resolution	203DPI	300DPI
Printing Mode	Direct Thermal and Thermal Transfer	
Max Printing Speed	6 ips (152.4 mm/s)	4 ips (101.6 mm/s)
Max Printing Width	4.25″(108 mm)	4.17″(106 mm)
Max Printing Length	157″ (4000 mm)	79″ (2000 mm)
HEAT™ Level	I	I
Memory	8 MB FLASH ROM, 16 MB SDRAM	
Media	Width: 4.37″ (111 mm) max., 0.98″ (25 mm) min. OD: 4″ (102 mm) max. or 9″ (229 mm) max. (using External Media Stand). ID: 1″ (25.4 mm) min.	
Media Thickness	0.003″ ~ 0.006″ (0.08 ~ 0.15 mm), including liner	
Ribbon	Width: 4.3″ (110 mm) max. Length: 984' (300 m) max. OD: 3″ (76.2 mm) max. ID: 1″ (25.4 mm) min.	
Media Sensor	Reflective (Adjustable)/Transmissive (Two positions)	
Fonts	Five built-in dot matrix ASCII fonts, user-downloadable TrueType Fonts	
Barcode Types	1D Barcode: Code 39, Code 93, Code 128/subset A,B,C, Codabar, Interleave 2 of 5, UPC A/E 2 and 5 add-on, EAN-13/8/128, UCC-128, etc. 2D Barcode: MaxiCode, PDF417, Data Matrix, QR Code, etc.	
Interfaces	RS-232 Serial, USB DEVICE 2.0	
Power Adapter	Input: AC 100~240 V, 50~60 Hz Output: DC 24 V, 2.5 A	
Weight	6.17lbs (2.8 kgs)	
Dimensions	W 9.3″ (236mm) x D 11.5″ (291mm) x H 7.8″ (199 mm)	
Operating Environment	Temperature: 32° F ~ +104° F (0° C ~ 40° C) Relative humidity: 5% - 85% non condensing	
Storage environment	Temperature: -40° F ~ +140° F (-40° C ~ 60° C) Relative humidity: 5% - 85% non condensing	
Optional items	Centronics Parallel Port*	
	Wi-Fi, Bluetooth, Guillotine Cutter, Rotary Cutter, External Label Rewinder, Media Guide Adapter, 10/100 M Adaptive Ethernet Port	

HEAT™, or Heating Equilibrium Adaptive Tuning, is a POSTEK designed and developed cutting-edge technology that sets the benchmark for heat management in thermal printing. Printers equipped with HEAT™ have significant improvements in their printout clarity and print speed. The HEAT™ level represents the fineness of the heating uniformity with level I being the finest.

** Factory dependent.*

1.2 Contents in the Box

Inspect the shipping carton(s) for possible shipping damage, if damage is discovered, notify the shipping company to report the nature and extent of the damage.

Please check the items according to the Quick Start Guide. If there are any items missing, notify your authorized reseller.

Chapter 2: Setup and Use

2.1 Main Parts and Structures

2.1.1 Front View

Figure 2-1 shows the front view of the C168 Series printer.

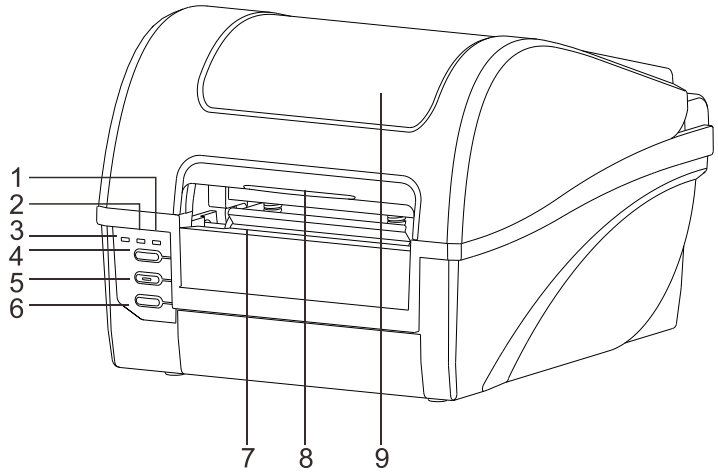

Figure 2-1 Front View

Table 2-1 Front View Description

Number	Description
1	[RIBBON]Indicator
2	[MEDIA]Indicator
3	[READY]Indicator
4	[Pause/Self Test]Button
5	[Feed/Calibration]Button
6	[Cancel/▮▸Reset]Button
7	Tear-off Bar
8	Cover Handle
9	Top Cover

2.1.2 Internal View

Figure 2-2 shows the detailed structure of the printer.

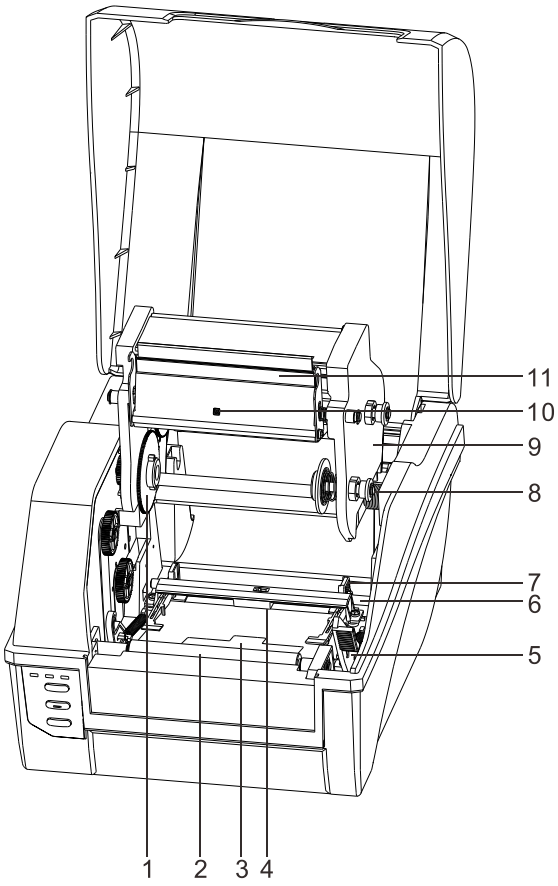

Figure 2-2 Internal View

Table 2-2 Internal View Description

Number	Description
1	Left Mount_Ribbon supply
2	Platen Roller
3	Reflective Media Sensor
4	Transmissive Media Sensor
5	Printhead Release Lever
6	Media Guide Rod
7	Media Guide
8	Release Knob
9	Printhead Module
10	Ribbon End Sensor
11	Printhead

2.1.3 Rear View

The printer is equipped with multiple interfaces. See Figure 2-3.

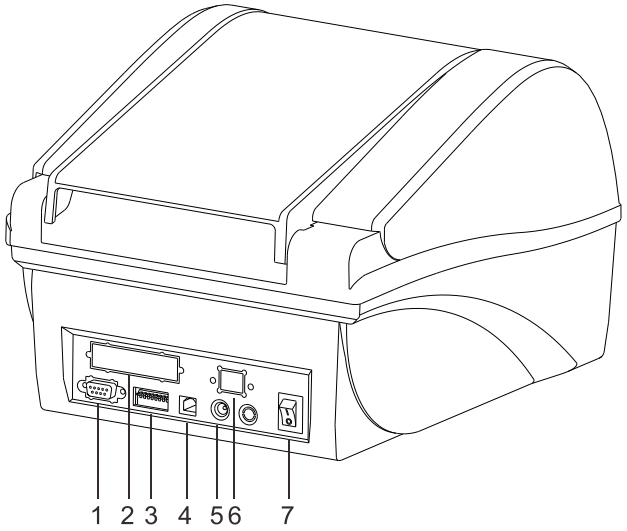

Figure 2-3 Rear View

Table 2-3 Rear View Description

Number	Description
1	RS-232 Serial Port
2	Centronics Parallel Port (Extensible)
3	DIP Switches
4	USB Port
5	DC In Port
6	Ethernet Port (Extensible)
7	Power Switch

2.2 Setting up the Printer

2.2.1 Interface Connection

CAUTION

When connecting the C168 Series printer to a computer via the USB interface cable, make sure to utilize the same USB port used during the driver installation process. If the same USB port is not available or not known, then please go to the printer driver's Properties Dialogue Box, and make sure the correct port is checked under the Ports tab.

The C168 supports RS-232 Serial and USB interface connections, you can choose to connect the printer to the computer via these ports.

To connect:

- Make sure the printer is powered OFF.
- The printer will identify the communication port automatically.
- The default values of printer port can be obtained from the self-test report (see 3.1.3 Advanced Functions/Obtaining printer configuration Information).
- Cable configurations for Serial (RS-232C) interface can be found in Appendix A: Interface Specifications of this guide.
- Please take the following measures to reduce cable noise.
  - Restrict the length of the interface cable to less than 6' (1.83 M) if possible.
  - Keep the interface cable separate from power cords.

2.2.2 Connecting the Printer

WARNING

- *Do not use the printer near liquids or corrosive chemicals.*
- *Using a wrong power adapter may cause damage to your printer. POSTEK assumes no liability for any damage in such cases. The rating for the printer is 24VDC.*

1. Make sure the printer is switched OFF.
2. Connect the power cord to the Power Adapter.
3. Connect the Power Adapter's DC output plug to the DC In Port on the back of the printer.
4. Plug the power cord into a live wall outlet.

2.2.3 Loading the Ribbon

CAUTION

- *Load ribbon only when using the thermal transfer printing mode. Remove any ribbon that may be loaded when using the direct thermal printing mode.*
- *When using a ribbon roll with a width less than 110m, please place the ribbon roll in the middle of the Ribbon Spindle corresponding to the symmetry symbol (→|←).*

To install the ribbon:

1. Lift the top cover and push down the Printhead Release Lever to release the Printhead Module, see Figure 2-4.

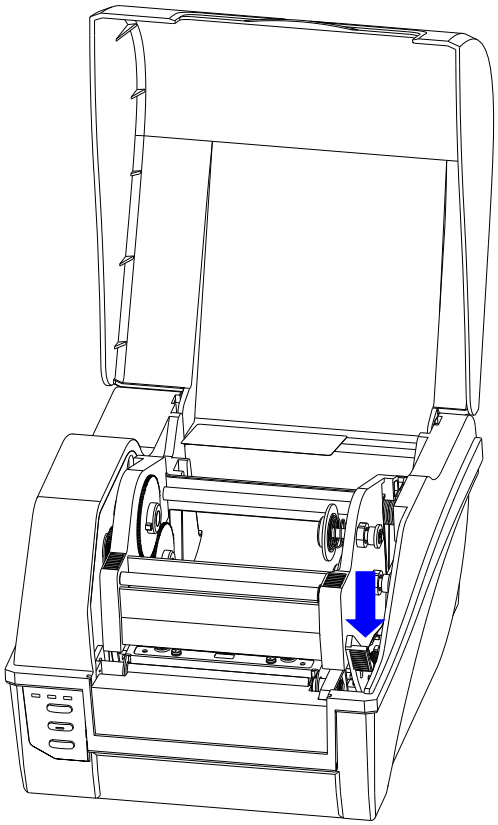

Figure 2-4 Release the Printhead Module

2. Lift the Printhead Module to expose the Ribbon Supply compartment, see Figure 2-5.

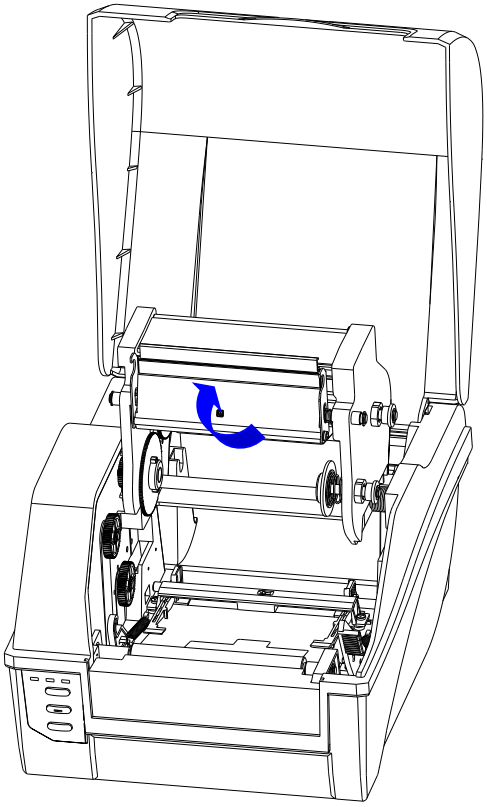

Figure 2-5 Lift the Printhead Module

3. Unwrap the ribbon package and separate the ribbon roll and the spare core.
4. Slide the ribbon roll onto one of the Ribbon Spindles and place the spare core onto the other spindle, see Figure 2-6.

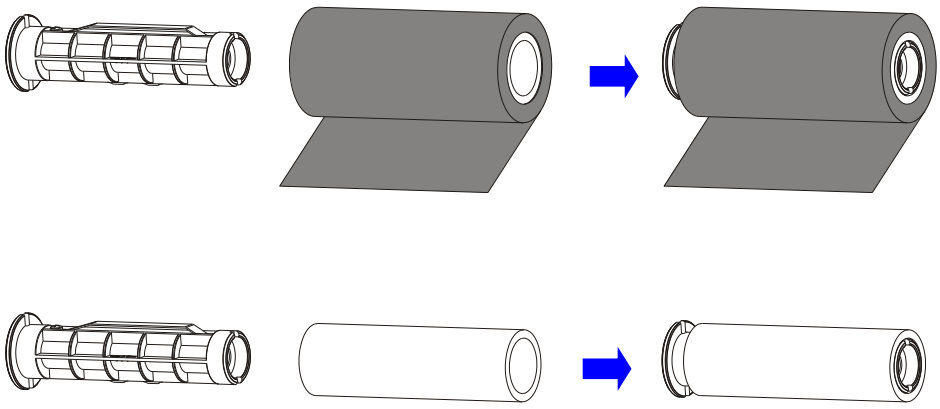

Figure 2-6 Place Ribbon Roll and Spare Core on Ribbon Spindles

5. Pull the Release Knob of the Ribbon Supply compartment outwards and place the ribbon roll in the Ribbon Supply compartment, aligning its ends with the Left Mount and the Right Mount which the Release Knob is attached to. Release the knob to secure the ribbon roll in the Ribbon Supply compartment, see Figure 2-7.

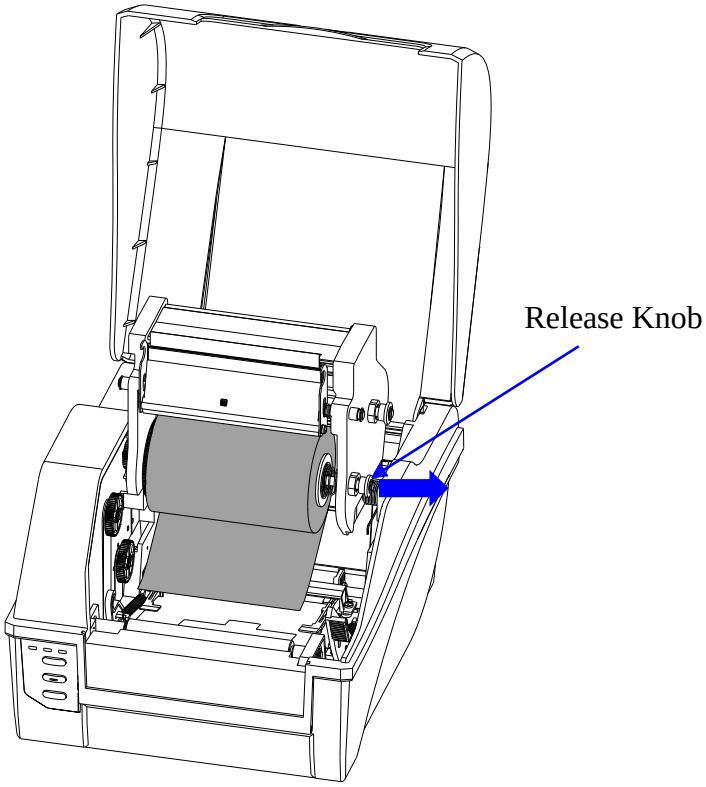

Figure 2-7 Load Ribbon Roll

6. Route the ribbon through the Printhead Module and wrap the end of the ribbon around the spare core, see Figure 2-8.

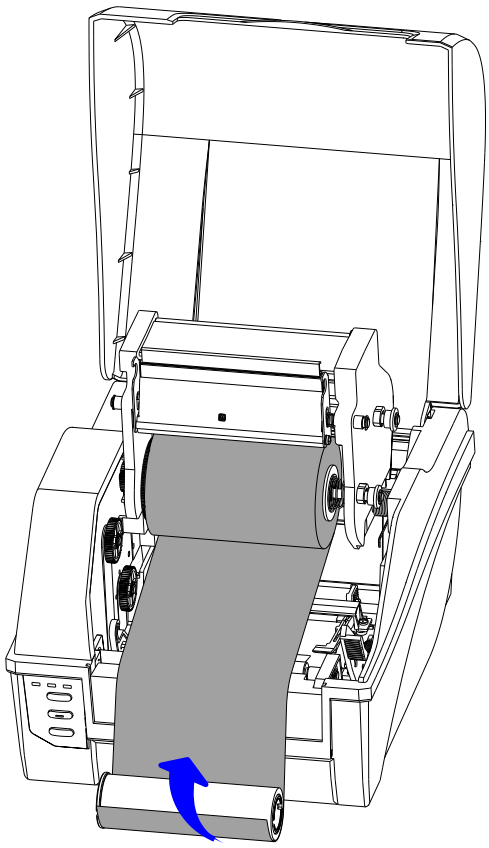

Figure 2-8 Wrap Ribbon on the Core

7. Pull the Release Knob of the Ribbon Take-up compartment outwards and load the core in the Ribbon Take-Up compartment, see Figure 2-9.

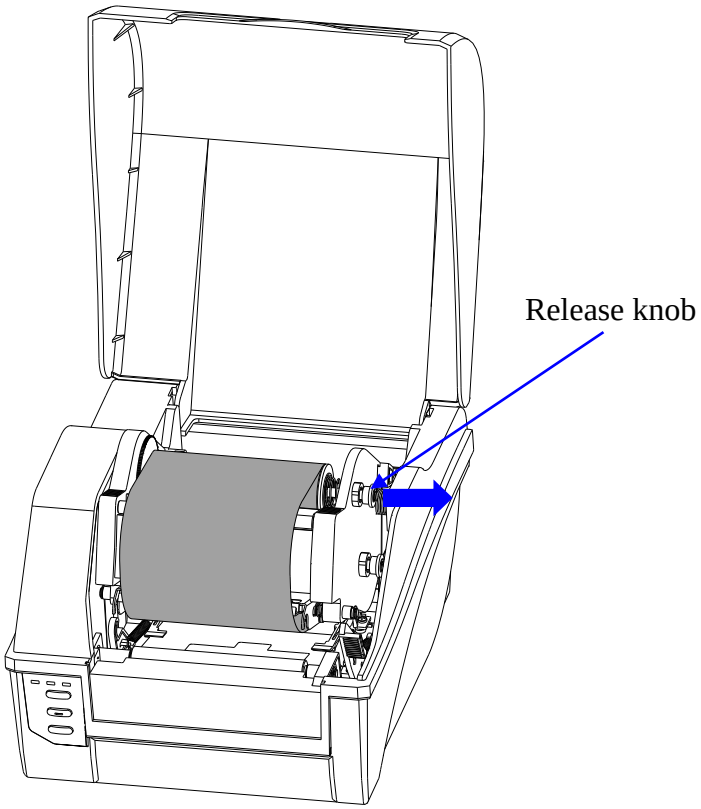

Figure 2-9 Place the Core on Ribbon Take-up

8. Turn the Left Mount of Ribbon Take-up to ensure the ribbon is tight and smooth, see Figure 2-10.

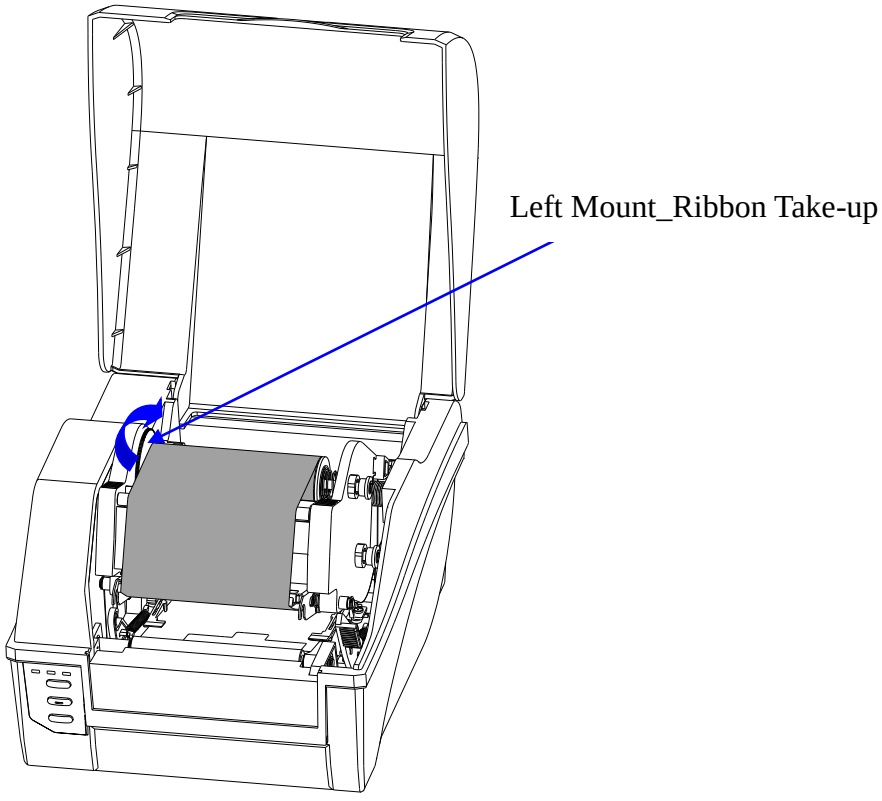

Figure 2-10 Ribbon Roll loaded

NOTE

To make sure the Ribbon End Sensor works properly, please use ribbon rolls which end with reflective materials or transparent materials with good reflective performance.

2.2.4 Loading the Media

C168 printers can be operated under four different modes: Standard Mode, Tear-off Mode, Cutter Mode, and Peeler Mode.

- In Standard Mode, the printer stops and goes into standby as soon as the print job is complete.
- In Tear-off Mode, after the print job is finished, the printer will feed the label until the edge of it aligns with the edge of the Tear-off Bar allowing easy tear off for the user.
- In Cutter Mode, the printer stops and cuts the printed label(s) (Only available on models with cutter installed).
- In Peeler Mode, printer stops and waits for the printed and peeled off label to be taken away before resuming the print job (Only available on models with peeler installed).

Standard Mode

To load media into the C168 while under Standard Mode, follow the steps below:

1. Load a roll of media (labels facing up) on the Media Spindle, then slide the two Media Roll Guides, with smooth sides facing toward the media, onto the Media Spindle from each end until both Media Roll Guides touch the media. When placing a roll of media with a 3″ ID core, please slide the two Core Adapters onto the Media Spindle first, as shown in Figure 2-11.

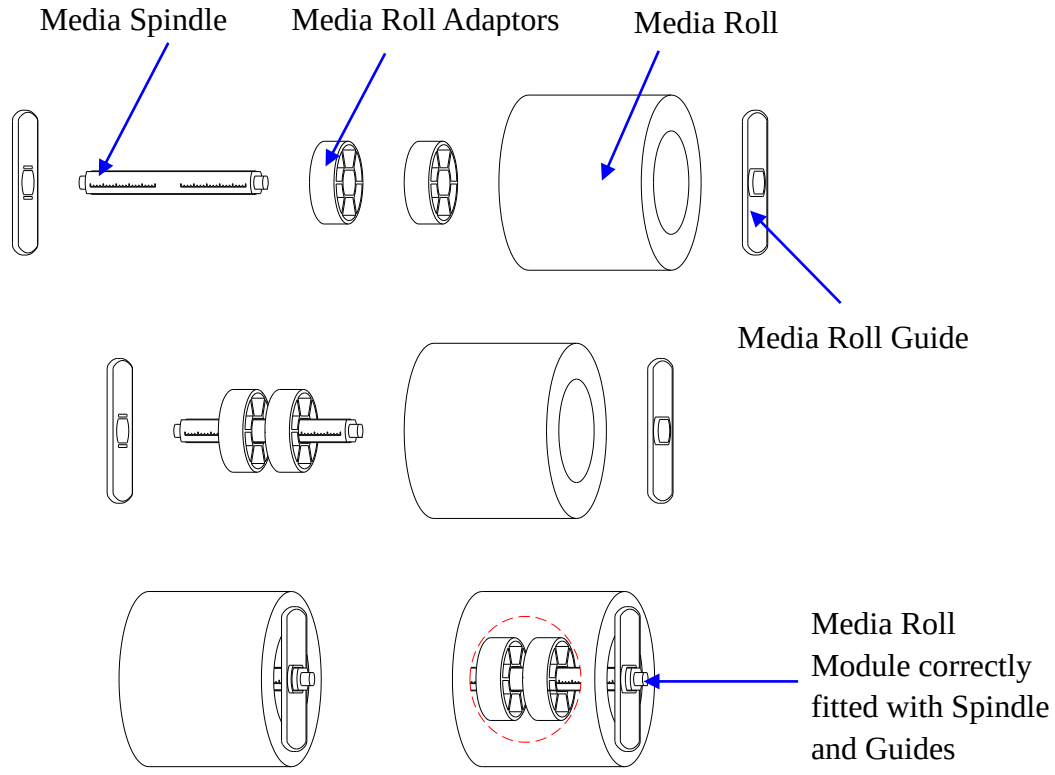

Figure 2-11 Place Media Roll on Media Spindle

2. Place the entire unit into the media compartment in the printer.
3. Position the media roll in the middle of the Spindle, using the ruler on the Media Spindle for alignment, see Figure 2-12.

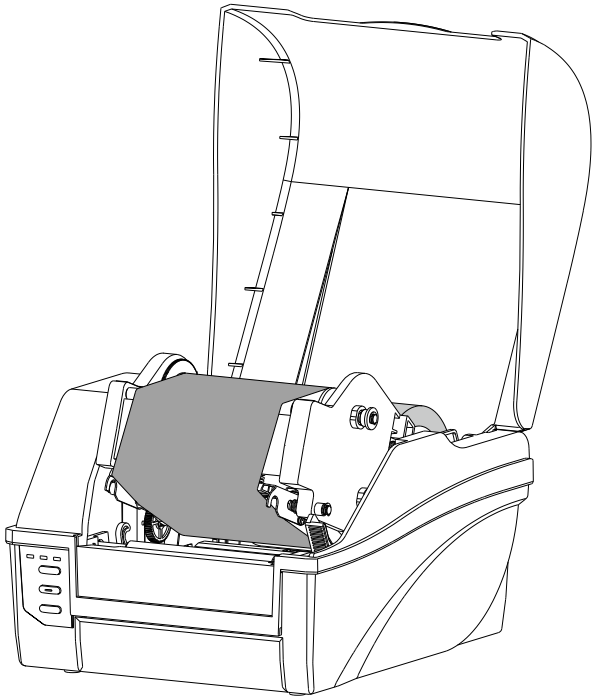

Figure 2-12 Load the Media

4. Thread the media under the Media Guide Rod and Transmissive Media Sensor, as shown in Figure 2-13.

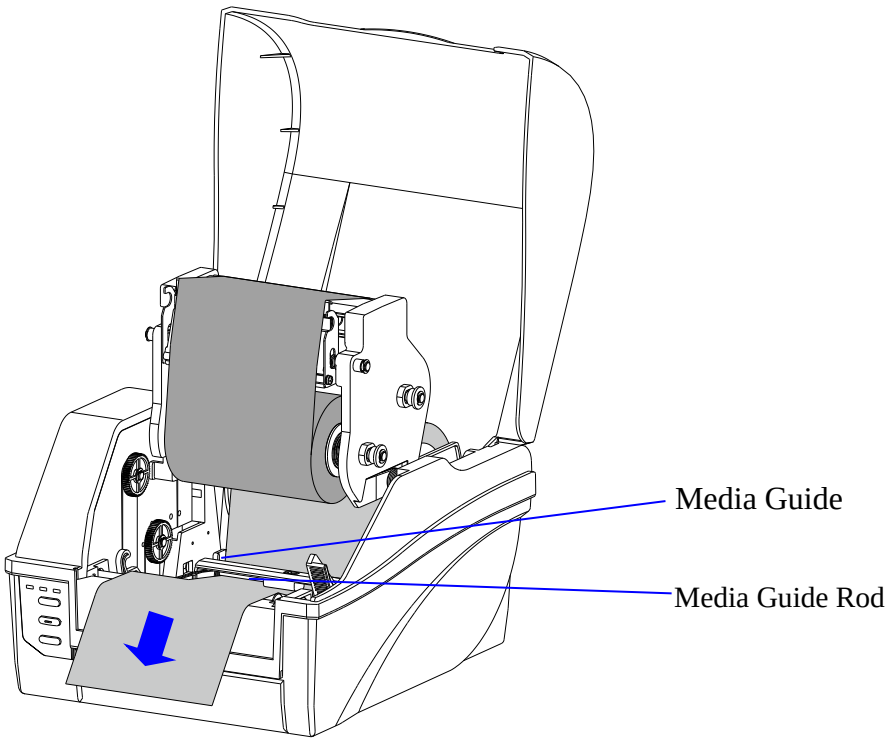

Figure 2-13 Thread the Media

5. Slide the Media Guide to the edge of the media, making sure that the media remains flat and is

placed in the middle of the Tear-off Bar. This can be checked with the ruler on the Tear-off Bar.

6. Press the Printhead Module downward until you hear a "click", which indicates the module have locked into place, as shown in Figure 2-14.

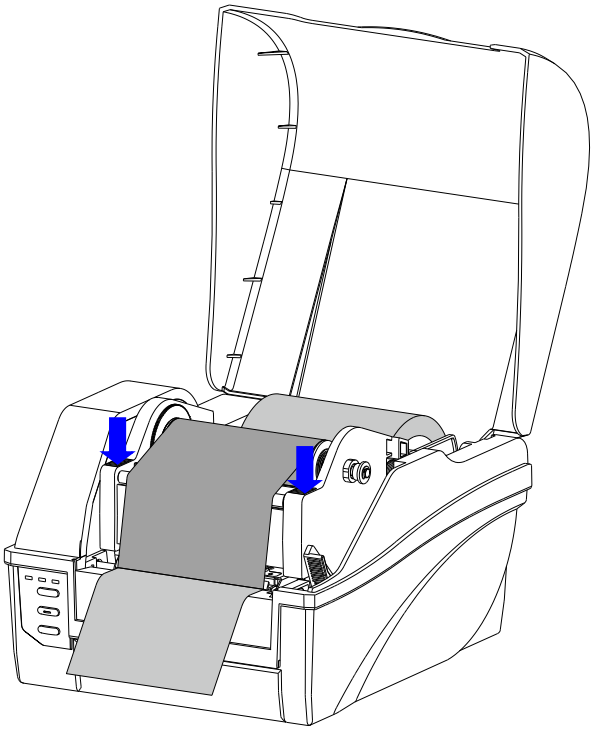

Figure 2-14 Media loaded

7. Turn on the printer, press and hold the [Feed/Calibration] button (hold for around 4 seconds), then the printer will automatically feed labels and the media calibration is done.

NOTE

Calibration must be made when media is loaded to the printer for the first time, or when there is a change to a different type of media.

2.3 Using the External Media Stand

CAUTION

It is recommended to install the External Media Stand when the outer diameter of the media roll is larger than 4 inches or when fanfold media is applied.

Label Roll

To load label roll on External Media Stand, follow the steps below:

1. Place the front part of the External Media Stand under the printer, making sure the two rear rubber feet of the printer are fitted into the two holes on the media stand, see Figure 2-15.

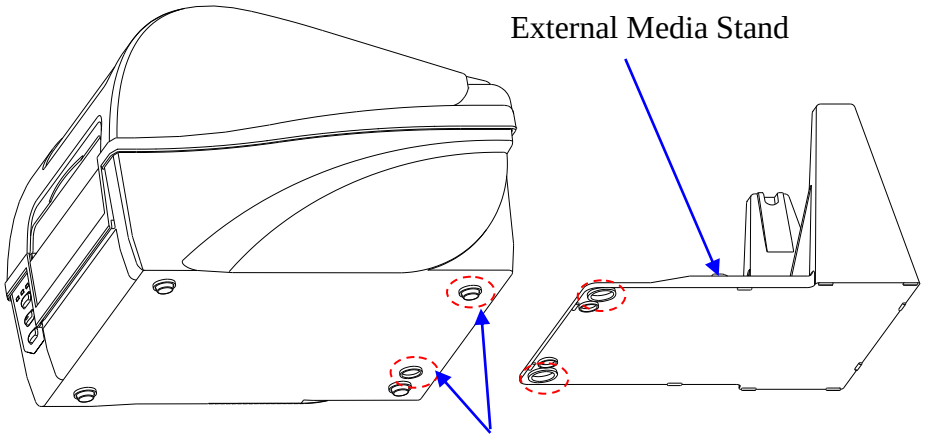

Figure 2-15 Place the External Media Stand

2. Load the ribbon referring to 2.2.3 Loading the Ribbon.
3. Load a roll of media (labels facing up) on the Media Spindle, then slide the two Media Roll Guides, with smooth sides facing toward the media, onto the Media Spindle from each end until both Media Roll Guides touch the media. When placing a roll of media with a 3″ ID core, please slide the two Core Adapters onto the Media Spindle first, as shown in Figure 2-16.

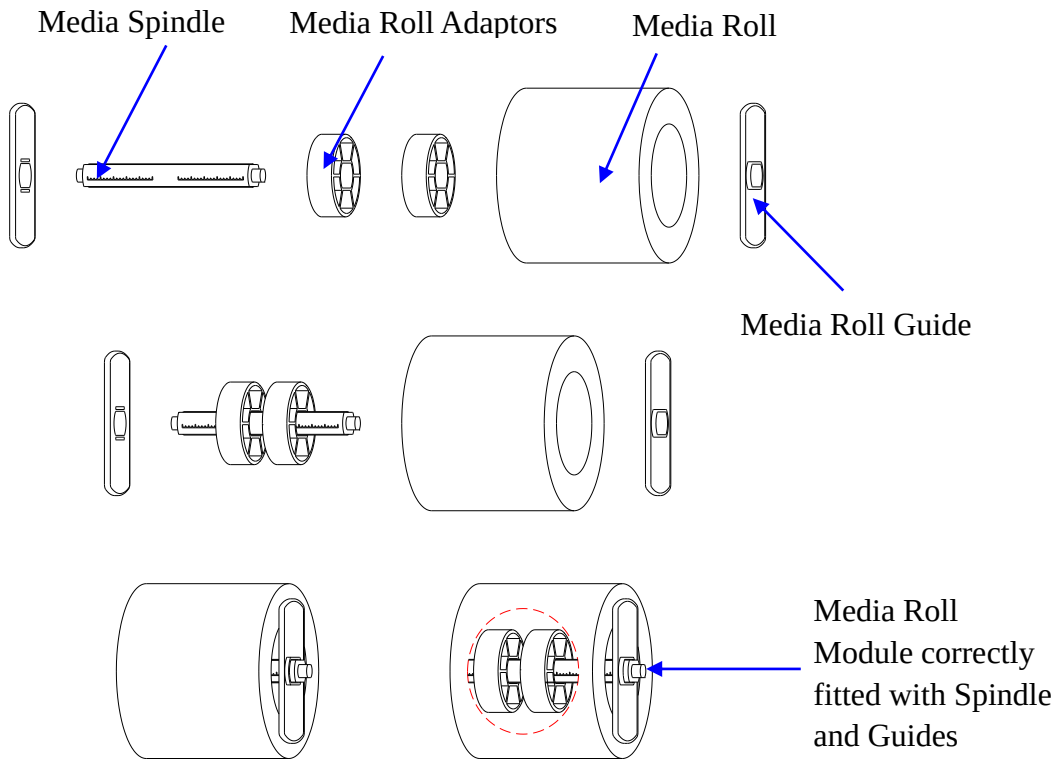

Figure 2-16 Place Media Roll on Media Spindle

4. Place the entire unit onto the External Media Stand.
5. Position the media roll in the middle of the Spindle, using the ruler on the Media Spindle for alignment. See Figure 2-17.

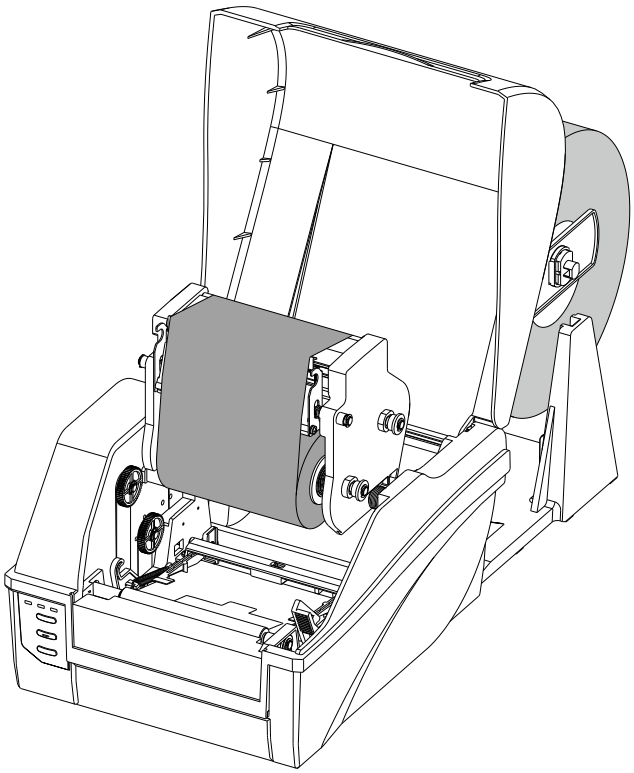

Figure 2-17 Load the Media

6. Thread the media under the Media Guide Rod, over and pass the Platen Roller to the front of

the printer.

7. Slide the Media Guides to the edge of the media, making sure that the media remains flat and is placed in the middle of the Tear-off Bar. This can be checked with the ruler on the Tear-off Bar. See Figure 2-18.

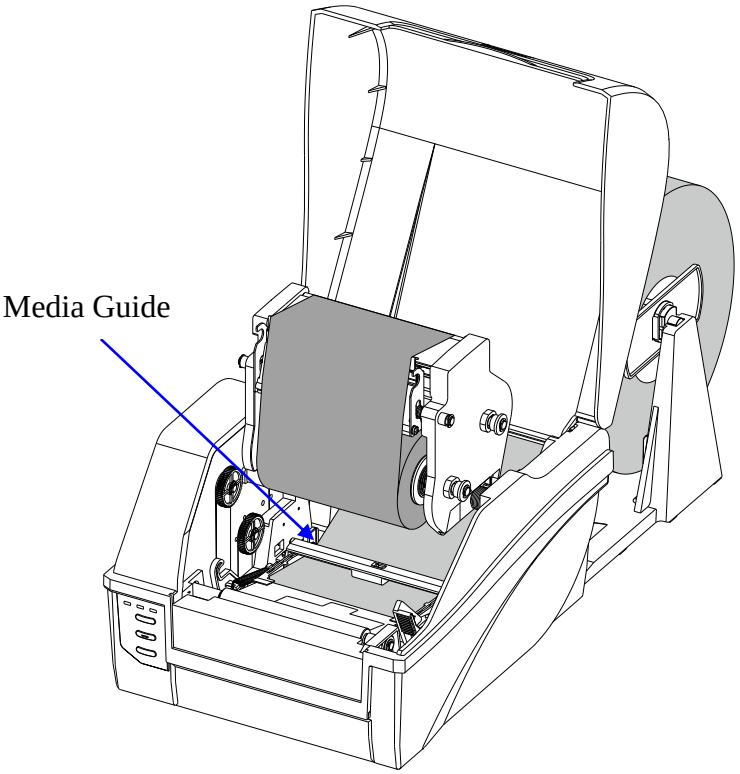

Figure 2-18 Thread the Media

8. Press the Printhead Module downward until you hear a "click", which indicates the module have locked into place, then close the top cover. See Figure 2-19.

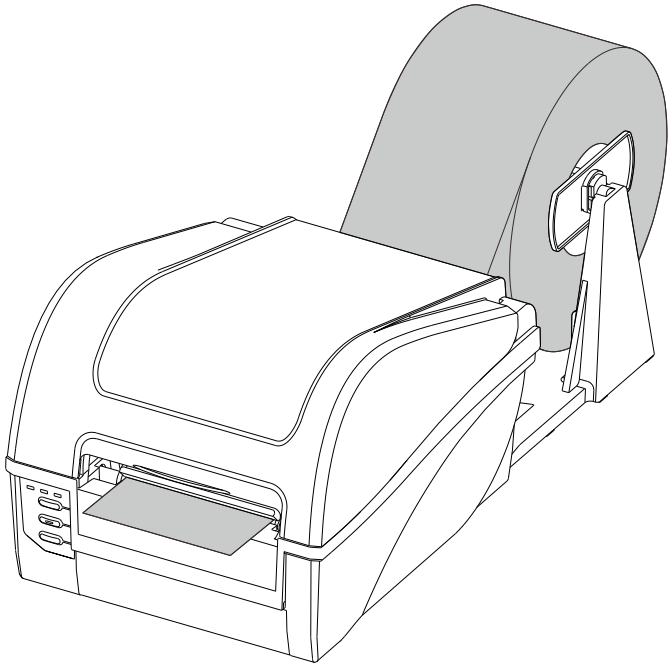

Figure 2-19 Media loaded

Fanfold Label

To load fanfold media on External Media Stand, follow the steps below:

1. Place the front part of the External Media Stand under the printer, making sure the two rear rubber feet of the printer are fitted into the two holes on the media stand, see Figure 2-20.

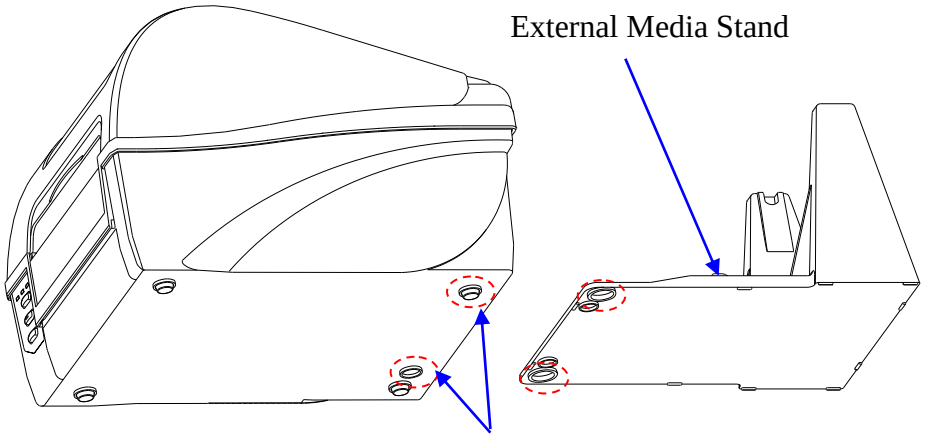

Figure 2-20 Place the External Media Stand

2. Load the ribbon referring to 2.2.3 Loading the Ribbon.
3. Thread the folded label through the media slot at the rear end of the printer, and go on to thread the media under the Media Guide Rod, over and pass the Platen Roller to the front of the printer.
4. Slide the Media Guides to the edge of the media, making sure that the media remains flat and is placed in the middle of the Tear-off Bar. This can be checked with the ruler on the Tear-off Bar. See Figure 2-21.

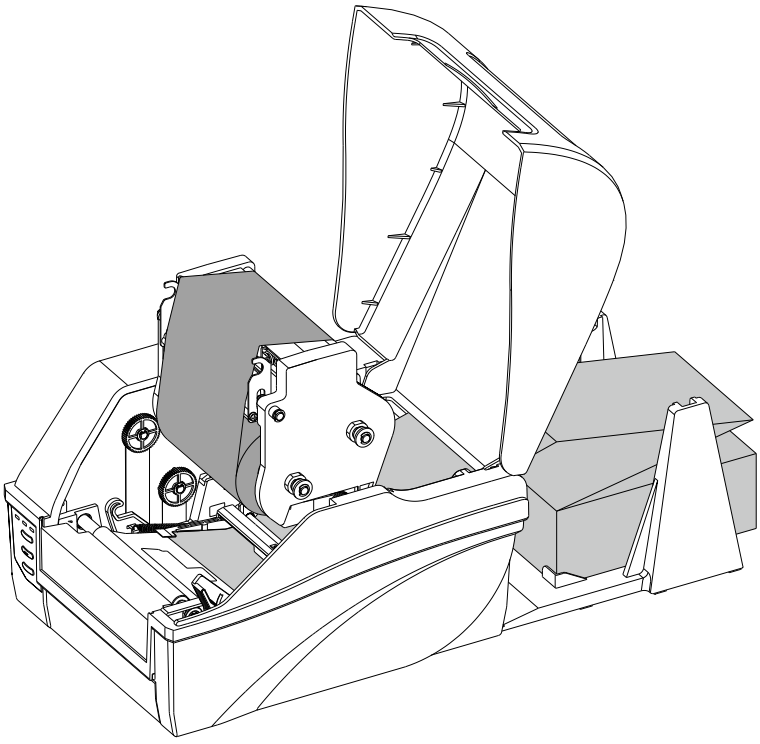

Figure 2-21 Thread the Media through Media Slot

5. Press the Printhead Module downward until you hear a "click", which indicates the module have locked into place, then close the top cover. See Figure 2-22.

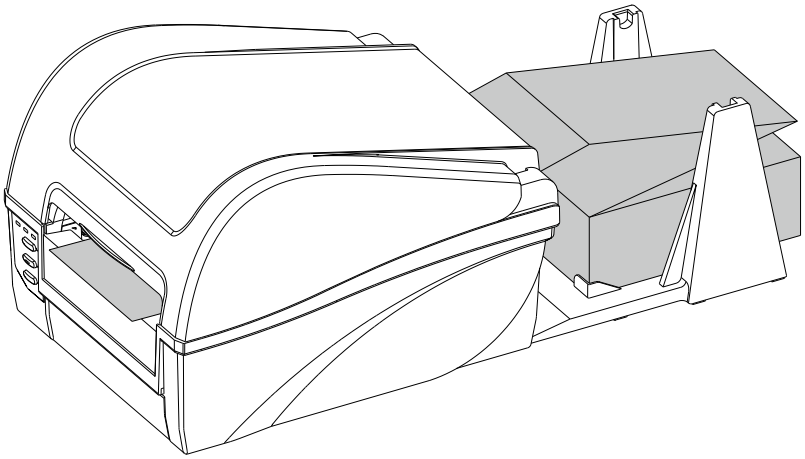

Figure 2-22 Fanfold Label Loaded

2.4 Adjusting the Position of Media Sensor

1. Lift the top cover.
2. Push down the Printhead Release Lever to release the Printhead Module.
3. To adjust the position of the Reflective Sensor: Lift the Printhead Module to expose the Media Sensor cover, remove the Media Sensor cover and slide the Media Sensor to the appropriate position, then replace the media sensor cover.
4. To adjust the position of the Transmissive Sensor: Flip the Toggle Switch to choose center or right position according to the media type, see Figure 2-23. (To shift the media sensor type, please refer to 3.1.4 DIP Switches)

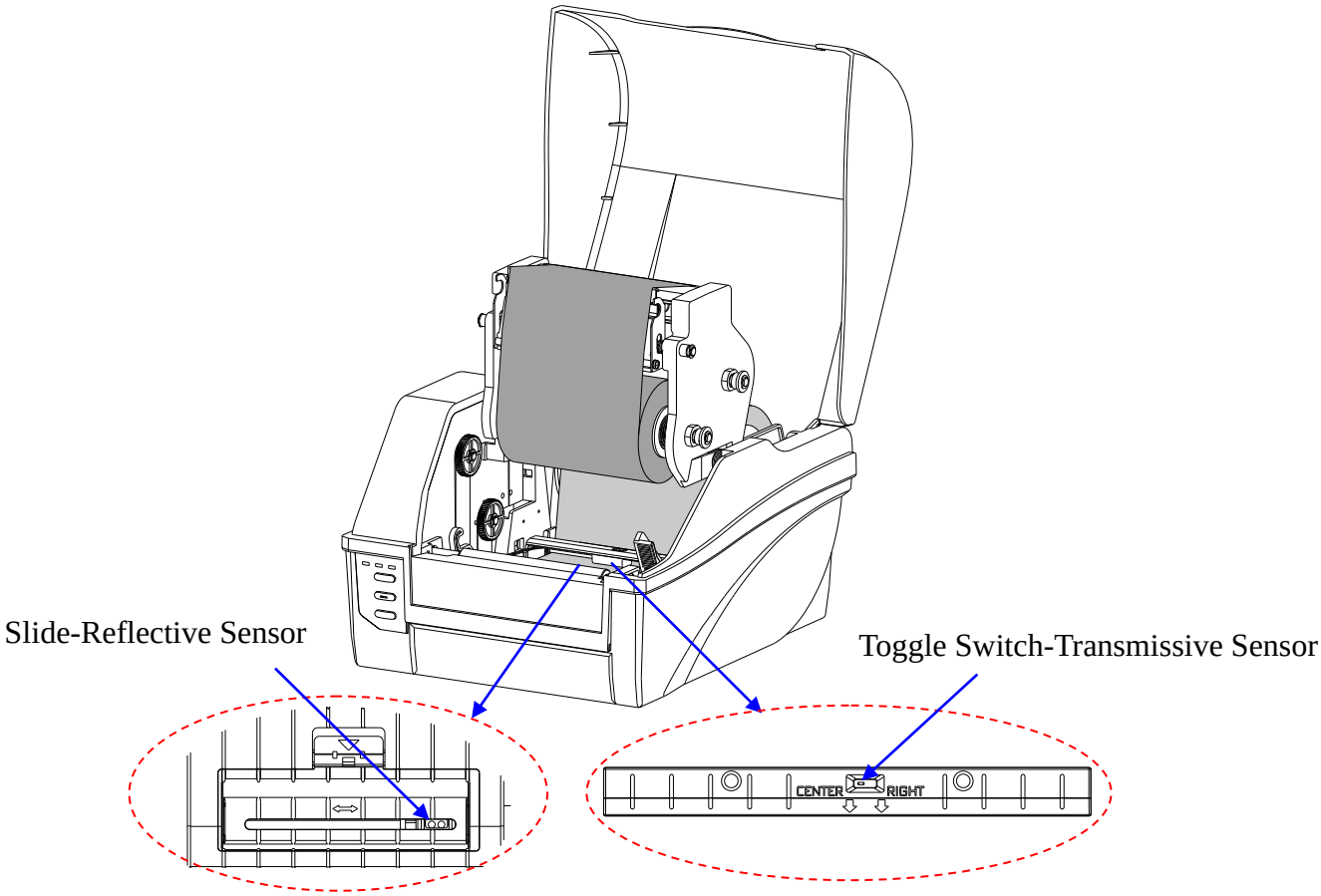

Figure 2-23 Adjust the Media Sensor Position

NOTE

- *Black ribbon is required when use Reflective Sensor, or the Media Out signal may not be detected.*
- *Technically, the Transmissive Sensor is designed to detect a gap, hole or notch between labels, the Reflective Sensor is for detecting black marks. However, in many cases, the Reflective Sensor also can be used to detect gap, hole or notch. When choose Reflective Sensor to detect gap between labels, please refer to Figure 2-24(a) (b) (c) to adjust the position of the sensor for different media types as shown, the sensor shall be placed between the dotted lines.*

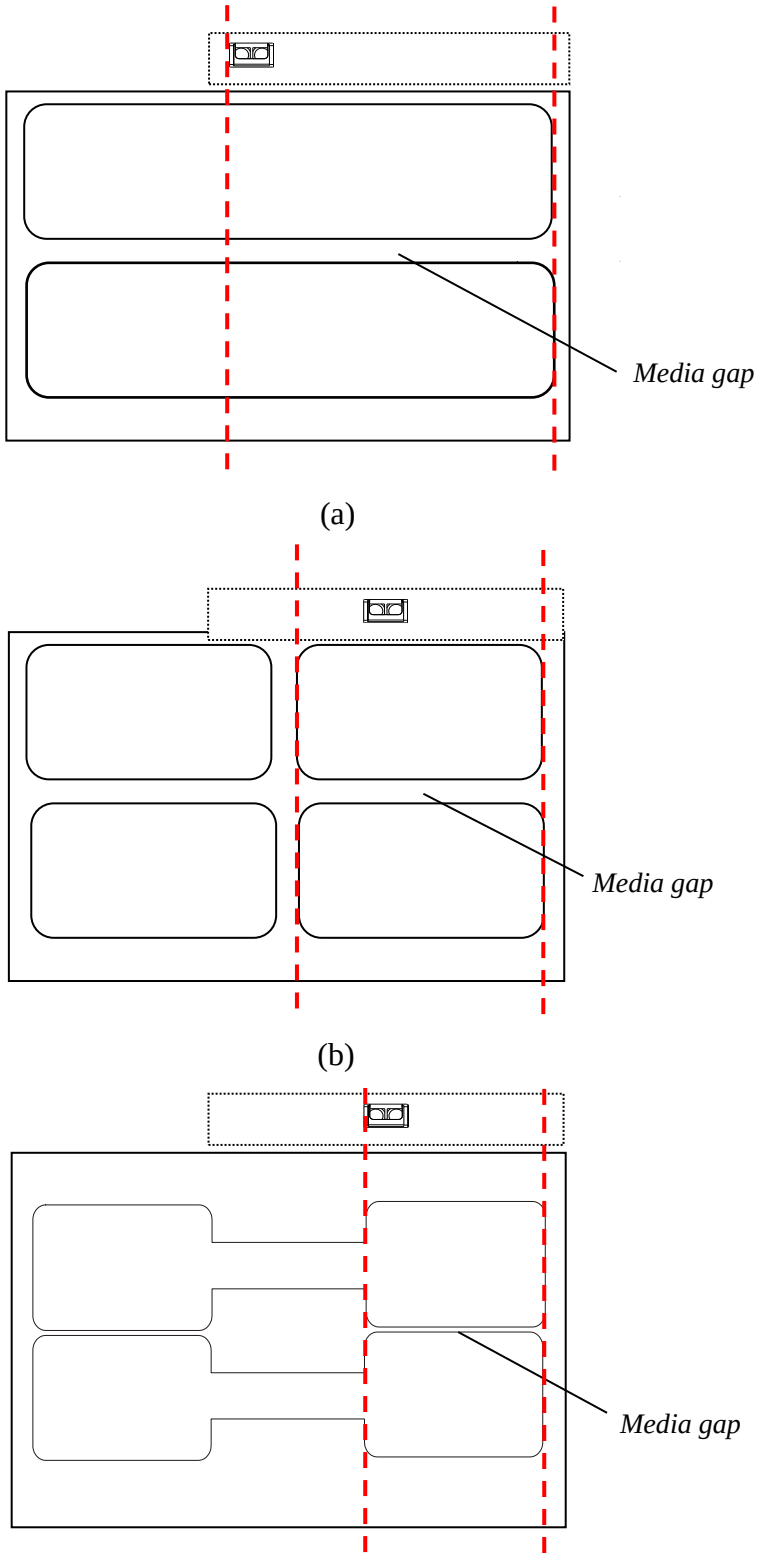

Figure 2-24 Media Sensor Position

- *When roll media is produced, the media end would be fixed on the media core by duct tape or scotch tape. If your printer cannot detect Media Out signal well, please refer to Figure 2-25 to check the position of the tape.*

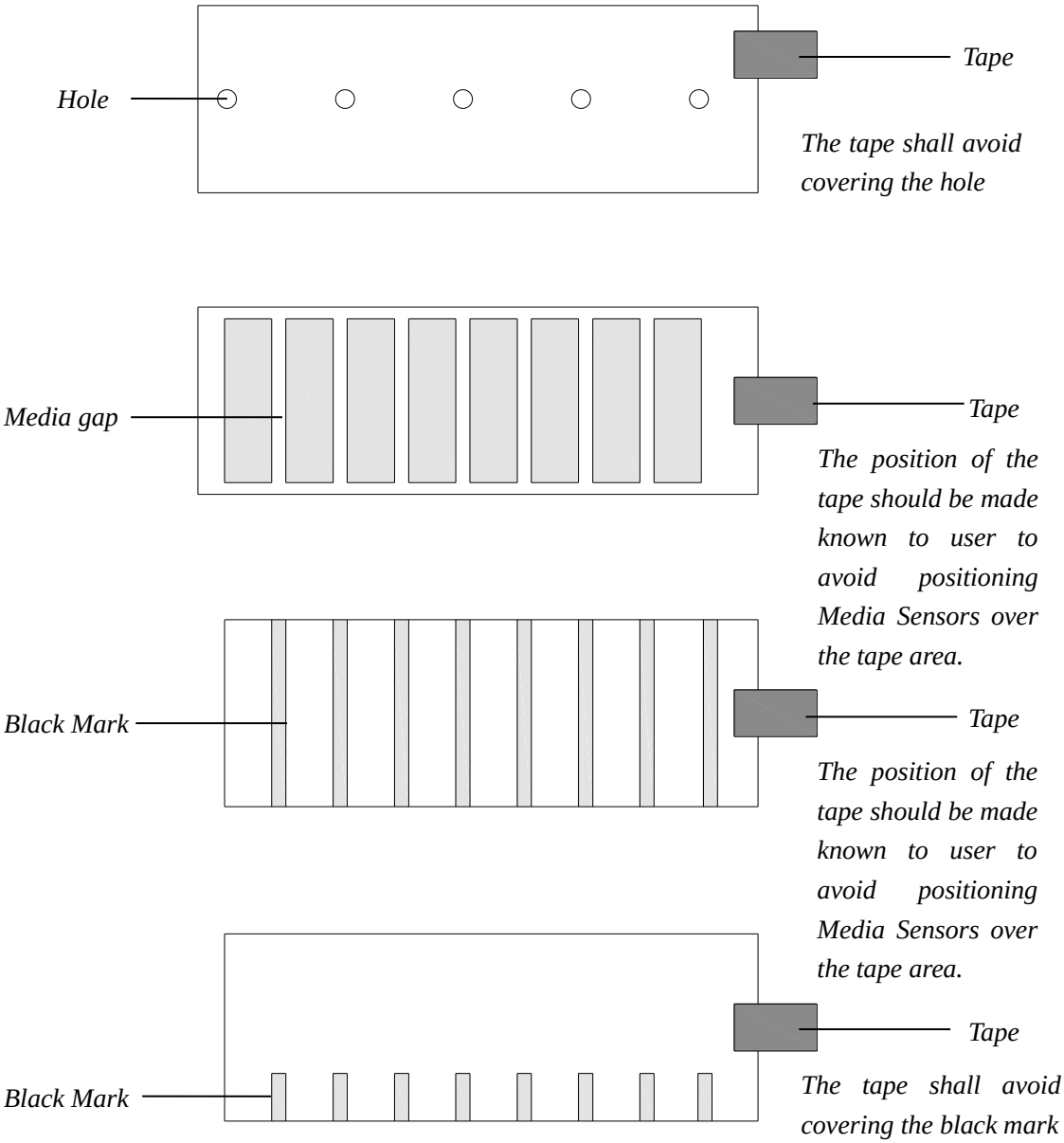

Figure 2-25 End-fixing Tape Position

Chapter 3: Operations and Settings

3.1 Basic Operations

3.1.1 Power Switch

The power switch is on the back panel of the printer. The symbols on the switch are defined as follows:

- — stands for power on
- O stands for power off

3.1.2 The Front Panel

The Front Panel of the printer consists of:

- Three LED Indicators: [READY], [MEDIA] and [RIBBON]
- Three multi-function buttons: [Pause/Self Test], [Feed/Calibration] and [Cancel/▮►Reset]

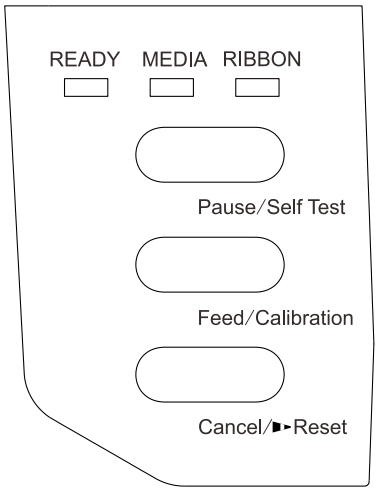

Figure 3-1 Front Panel

LED Indicators

The three indicators on the front of the printer shows the different states that the printer is in, please refer to Table 3-1 below for details.

Table 3-1 LED Indicator Description

LED Indicator	Description
[READY]	• If the indicator is on, the printer is ready and waiting for user input • If only the [READY] indicator is blinking, then the printer is

LED Indicator	Description
	paused and awaiting further instruction
[MEDIA]	• If the indicator is on, it means the printer is at a normal working state • If both the [READY] and [MEDIA] indicators are blinking, then the printer detected media out
[RIBBON]	• If the indicator is on, it means the printer is using thermal transfer mode (Requires ribbon) • If the indicator is off, it means the printer is using direct thermal mode (No ribbon required) • If both the [READY] and [RIBBON] indicators are blinking, then the printer detected ribbon out

Panel Buttons

The three buttons on the front of the printer, please refer to Table 3-2 below for details regarding their functionality.

Table 3-2 Panel Button Description

Button	Basic Functions	Advanced Functions (Press and hold for 4 seconds)
[Pause/Self Test]	• When printer is in working or standby state, press once to pause the printer • When printer is in a paused state, press once to resume	Self-test: The printer performs a self-test and prints out a configuration report
[Feed/Calibration]	When printer is in a standby state, press once and the printer would feed one label	Media Calibration
[Cancel/■►Reset]	When printer is in an error state, press once to clear the error report	Reset: Resets the printer to Factory Default Settings

3.1.3 Advanced Functions

Media Calibration

When the printer is on standby, press and hold the [Feed/Calibration] button (hold for around 4 seconds), the printer will automatically feed labels and the media calibration is done. During this process, all three indicators will start blinking. When all three indicators stop blinking and return to a steady state, the media calibration is complete.

NOTE

- *When it is the first time installing the media or when changing to a different type of media, media calibration must be performed.*
- *No calibration is needed when using continuous media.*

Obtaining printer configuration Information

When the printer is on standby, press and hold the [Pause/Self Test] button (hold for around 4 seconds), all three indicators will blink once and then return to a steady state, the printer will print a self-test page with detailed information regarding the printer's configuration then return to standby.

The information includes: The printer's model, firmware version, hardware's parameters and its current status, thermal transfer/direct thermal mode, font list, etc.

Reset to factory setting

When the printer is on standby, press and hold the [Cancel/▮►Reset] button (hold for around 4 seconds), all three indicators will start blinking (if no further input is detected for the next 8 seconds then the printer will return to standby). Release the [Cancel/▮►Reset] button and press it again to initiate the reset process, the [READY] indicator would be off and the rest two indicators would blink simultaneously, when all three indicators are lit and return to a steady state, the reset process is complete.

NOTE

The number of printed labels (pcs) and printed length (m) cannot be restored to factory default value.

3.1.4 DIP Switches

The DIP Switch panel is located on the back of the printer, as shown in Figure 3-2.

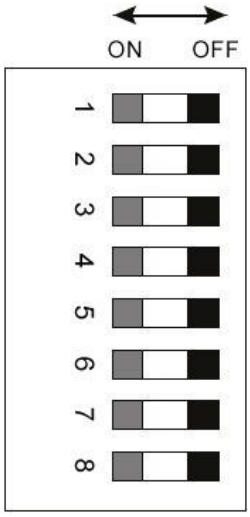

Figure 3-2 DIP Switch

Table 3-3 DIP Switch Description

Position	Corresponding Functions
1	Set printing mode ON: Direct Thermal OFF: Thermal Transfer
2	Set Tear-off Mode ON: Tear-off Mode enabled OFF: Tear-off Mode disabled
3	Set Cutter Mode (Only available on models with Cutter installed) ON: Cutter Mode enabled OFF: Cutter Mode disabled
4	Set Peeler Mode (Only available on models with Peeler installed) ON: Peeler Mode enabled OFF: Peeler Mode disabled
5	Set the media sensor type ON: Transmissive OFF: Reflective
6	Set DHCP (Dynamic Host Configuration Protocol) ON: Enabled OFF: Disabled
7&8	Set serial BAUD-RATE BAUD-RATE for each combination: 7 OFF & 8 OFF: 9600 7 ON & 8 OFF: 19200 7 OFF & 8 ON: 38400 7 ON & 8 ON: 57600

CAUTION

- *Before making changes to the switches, please make sure the printer is powered off.*
- *All the switches should be off by default except the 5th position.*

3.1.5 Setting Operation Mode

Set appropriate operation mode for the printer.

Tear-off Mode

The steps to set the printer to Tear-off Mode are as follows:

1. Set the 2nd position of the DIP Switch to ON to enable Tear-off Mode, label would stop at the identifier position (for media with gaps, notches, black mark, etc) or set position (for continuous media) for users to tear off the printed label or tag manually.
2. Restart the printer.

Peeler Mode (Peeler accessory required)

The steps to set the printer to Peeler Mode are as follows:

1. Set the 4th position of the DIP Switch to ON to enable Peeler Mode.
2. Load consumables referring to operations under Standard Mode.
3. Restart the printer and perform Media Calibration: Press and hold the [Feed/Calibration] button for 4 seconds until three indicators blink simultaneously, the printer will automatically feed labels and the media calibration is done.
4. Create and edit label template in the label software, and click at "Print" to send the print task to the printer. Printing pauses until the peeled off label is removed.
5. The peeling position can be adjusted by Peel Offset in Utility tool under Peeler Mode.

Cutter Mode (Cutter accessory required)

The steps to set the printer to Cutter Mode are as follows:

1. Set the 3rd position of the DIP Switch to ON to enable Cutter Mode.

   NOTE

   Peeler Mode and Cutter Mode can't be both enabled at the same time, please turn off Peeler Mode first before switching Cutter Mode on.
2. Restart the printer and reset the cutter when the printer is on: Press and hold the

[Cancel/■►Reset] button for 4 seconds until three indicators blink simultaneously. Release the [Cancel/■►Reset] button and press it again to complete cutter reset. Turn off the printer.

3. Load consumables referring to operations under Standard Mode. Thread the label through the gap between the upper and the lower cutter blades.
4. Restart the printer and perform Media Calibration: Press and hold the [Feed/Calibration] button for 4 seconds until three indicators blink simultaneously, the printer will automatically feed labels and the media calibration is done.
5. Create and edit label template in the label software, and click at "Print" to send the print task to the printer. After each finished printing, the printer will automatically cut off the printed label(s).
6. The cutting position and cutting frequency can be adjusted in Utility tool under Cutter Mode. See Figure 3-3.

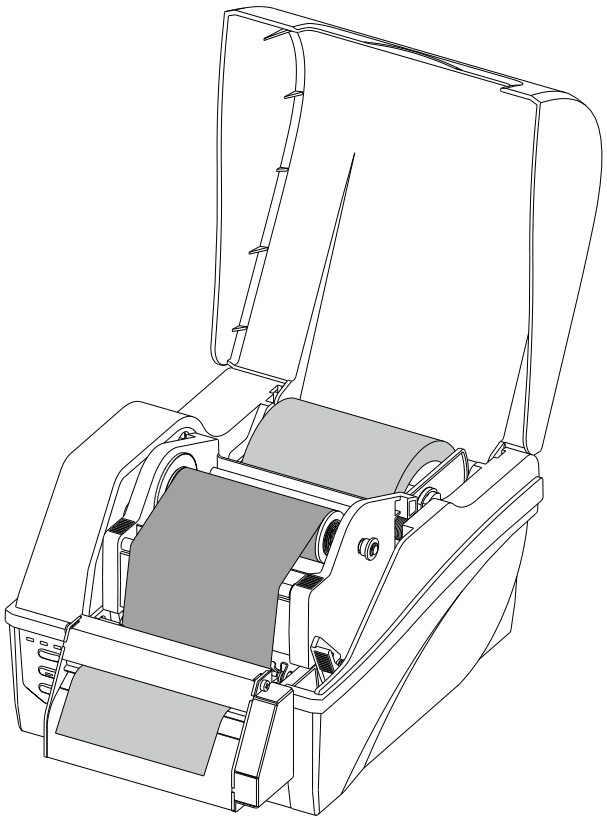

(a) Rotary Cutter

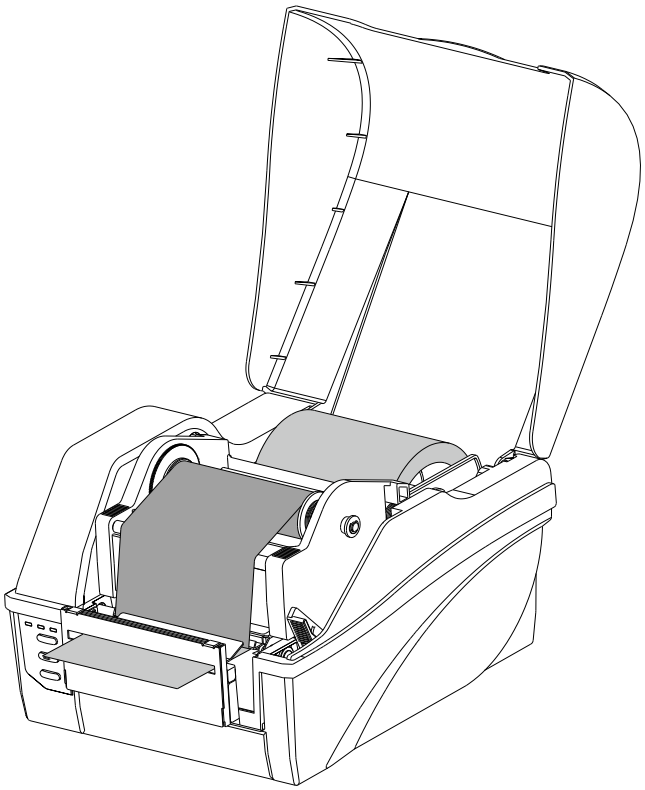

(b) Guillotine Cutter

Figure 3-3 Cutter Mode

CAUTION

The default cutter type is rotary cutter. If guillotine cutter is installed, please send the command: #UM>CU2 in Utility tool to the printer, and restart the printer after 3 seconds. Then send the command #UM>CC to set guillotine cutter as default, and restart the printer again.

3.2 Installing Windows Driver and Label Editing Software

The printer driver supports Win10/8/7. To access to the driver, please scan the QR code on the Quick Start Guide or visit POSTEK website: http://www.postekchina.com.

Each printer also comes with a BarTender UltraLite edition software. To access to the software and the directions for use, please scan the QR code on the Quick Start Guide or visit POSTEK website: http://www.postekchina.com.

CAUTION

Please uninstall the old version driver before driver updating.

Chapter 4: Maintenance

WARNING

- *Make sure the printer is powered off before performing maintenance operations.*
- *The Printhead may be hot due to recent printing. Wait until the Printhead cools before performing maintenance.*
- *Use only anhydrous isopropyl alcohol to clean the print head.*

4.1 Cleaning the Printhead

Due to the Printhead's functionality in the printer, it comes into contact with consumables and therefore is susceptible to dirt accumulation. If dirt is not removed, the Printhead may be damaged. To ensure longevity of the Printhead, follow the recommended maintenance guidelines below:

Clean the Printhead after every (1) roll of ribbon use or every (3) rolls of label media use. To clean the Printhead:

1. Turn off the printer.
2. Lift the top cover.
3. Push down the Printhead Release Lever to release the Printhead Module.
4. Remove the ribbon (if applicable) and media.
5. Use a cotton swab dipped in anhydrous isopropyl alcohol. Wipe the Printhead from end to end.
6. Allow a few seconds for the Printhead dry before using the printer again.

4.2 Cleaning the Platen Roller

The roller can accumulate debris from consumables, such as dirt, sand, dust or glue. To ensure longevity of the Platen Roller, follow the recommended maintenance guidelines below:

Clean the Platen Roller after every (3) rolls of label media used. To clean the Platen Roller:

1. Turn off the printer.
2. Lift the top cover.
3. Push down the Printhead Release Lever to release the Printhead Module.
4. Remove the ribbon (if applicable) and media.
5. Use a cotton swab dipped in anhydrous isopropyl alcohol. Rub the swab along the Platen Roller from end to end while rotating the roller until the swab no longer accumulates ink or debris.

4.3 Cleaning the Printer Interior

Over time, the printer's interior may collect dust or debris from the consumables. It is advised to periodically clean the printer's interior in order to prevent the accumulated debris from damaging internal parts.

To clean the printer interior, use a cotton swabs dipped into anhydrous isopropyl alcohol and remove any debris.

4.4 Cleaning the Sensors

Over time, dust and debris will accumulate over the sensors and affect their performance, to ensure proper detection, please clean the sensors with cotton swabs dipped into anhydrous isopropyl alcohol periodically.

Chapter 5: Troubleshooting

Occasionally situations occur that require some troubleshooting. Possible issues and potential solutions are listed in this section. While not every situation is addressed, you may find some of these tips useful.

5.1 LED Error Indication

Typically, when the printer is not functioning, one or two of the three indicators will begin blinking. The possible situations addressed by the status of the three indicators are listed in Table 5-1.

Table 5-1 LED Error Indications

Indication	Possible Cause	Solutions	Important notice
[READY] and [MEDIA] indicators blink simultaneously	Media sensor can't detect media	• Check and confirm the media has been loaded correctly (Please refer to 2.2.4 Loading the Media) • Check the position of the media sensor	If the media being used is continuous media (no locator present on the label). Then please set the media to Continuous Media in the printer driver settings.
	Media ran out	Load a new roll of media	If the printer has not been powered off and the print job has not been finished, after clearing the error: • Press [Feed/Calibration] button, the printer would reprint the previous label and then continue with the print job. • Press [Cancel/Reset] button, the printer would resume the print job. • Press and hold the [Cancel/Reset] button, the print job would be canceled.
	Media jammed	Clear the jam	
	The Media Roll Guides are not firmly pushed against the Media or have not been installed.	Install the Media Roll Guides correctly and push them firmly against the media.	
	Media sensor is dirty	Clean the media sensor	
	Media sensor is out of order	Contact an authorized POSTEK service provider for technical support.	
[READY] and [RIBBON] indicators blink simultaneously	Out of ribbon	Load a new roll of ribbon	
	Ribbon jammed	Make sure the ribbon follows a steady and smooth path	
	Ribbon spindle installed incorrectly	Please refer to 2.2.3 Loading the Ribbon for correct installation process.	
	Ribbon sensor is dirty	Clean the ribbon sensor	
	Ribbon sensor is out of order	Contact an authorized POSTEK service provider for technical support.	

Indication	Possible Cause	Solutions	Important notice
Only [READY] indicator blinks	The printer is in a paused state	Press the [Pause/Self Test] button to resume.	
	Cutter error	Please check whether the cutter is installed correctly, for details, please contact an authorized POSTEK service provider for technical support.	

5.2 Miscellaneous Issues

Table 5-2 identifies miscellaneous issues with the printer, the possible causes, and the recommended solutions.

Table 5-2 Miscellaneous Printer Issues

Problem	Possible Cause	Recommended Solution
Vertical Blank Lines Appear	Printhead is dirty.	Clean the Printhead. Follow the recommended maintenance guidelines for cleaning the Printhead.
Data Sent but Not Printing	The driver is incorrect.	Ensure the correct driver is chosen in the label software.
	Memory overflow	Reset the printer.
Poor Printing Quality	The printing parameters are set inappropriately.	• Adjust print darkness setting value. • Adjust print speed setting value.
	Printhead is dirty.	Clean the Printhead. Follow the recommended maintenance guidelines for cleaning the Printhead.
	Poor quality consumables	Change to higher-quality consumables.

NOTE

For errors not listed here, please contact an authorized POSTEK Service Provider for further assistance.

Appendix A: Interface Specifications

The RS232 connector on the printer is a DB9F:

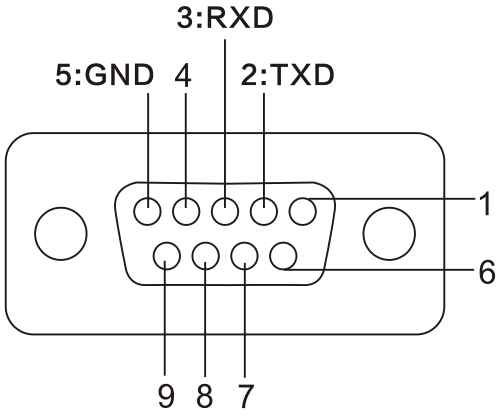

Number	Description	Definition
1	/	/
2	Out	TX
3	In	RX
4	/	/
5	-	Ground
6	/	/
7	/	/
8	/	/
9	/	/

Baud rate: 9600, 19200, 38400, 57600
Data format: 8 data bits, 1 start bit or 1 stop bit.
Flow control: None. If you are using software or drivers under the Windows environment, the flow control must be set to "hardware."

Any communications port can transmit data from the host (RS232, Ethernet, or USB). Preliminary communications settings are not required since the printer will automatically detect which port is active.

CAUTION

Never send data from 2 ports at the same time. Data cannot be sent to more than one port simultaneously or data corruption and print errors may occur.

Appendix B: ASCII Table

	0	1	2	3	4	5	6	7
0	NUL			0	@	P	`	p
1	SOH	XON	!	1	A	Q	a	q
2	STX		"	2	B	R	b	r
3		XOFF	#	3	C	S	c	s
4			$	4	D	T	d	t
5		NAK	%	5	E	U	e	u
6	ACK		&	6	F	V	f	v
7	BEL		'	7	G	W	g	w
8	BS		(	8	H	X	h	x
9			)	9	I	Y	i	y
A	LF		*	:	J	Z	j	z
B		ESC	+	;	K	[	k	{
C	FF		,	<	L	\	l	|
D	CR		-	=	M	]	m	}
E	SO	RS	.	>	N	^	n	~
F	SI	US	/	?	O	_	o	DEL
	0	**1**	**2**	**3**	**4**	**5**	**6**	**7**

NOTE

The € sign is included in the embedded table at DEC128 (HEX 80).

POSTEK

www.postekchina.com