

200G QSFP56/QSFP-DD Cable and Transceiver Modules Data Sheet

Copyright © 2022 FS.com All Rights Resverved

Contents

Product overview ---- 3

Features and benefits ---- 3

Product specifications ---- 11

Warranty ---- 15

Ordering information ---- 16

Regulatory and standards compliance ---- 19

Additional information ---- 20

Document history ---- 20

Copyright © 2022 FS.COM All Rights Reserved

Product overview

The FS® 200GBASE Quad Small Form-Factor Pluggable (QSFP56/QSFP-DD) portfolio offers customers a wide variety of high-density and low-power 200 Gigabit Ethernet connectivity options for data center, high-performance computing networks, enterprise core and distribution layers, and service provider applications. The QSFP56/QSFP-DD-200G modules are our latest generation of 200G transceiver modules solution based on a QSFP56/QSFP-DD form factor. (See Figure 1).

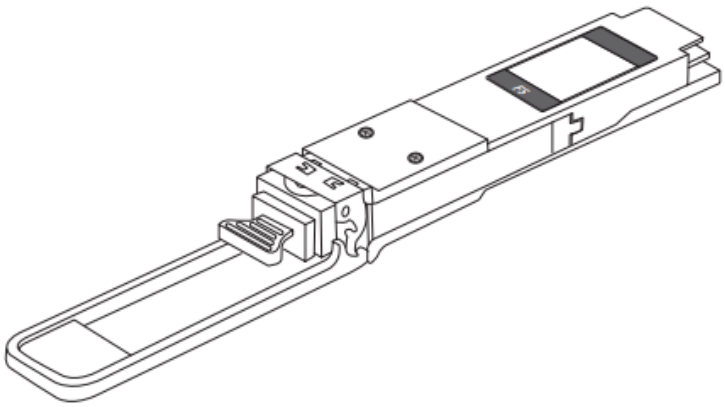

- QSFP-SR4-200G •QSFP-FR4-200G •QDD-SR4-2x100G •QSFP-LR4-200G

Figure1.

QSFP56/QSFP-DD 200G Optical modules

Features and benefits

- Hot-swappable input/output device that plugs into a 200G Gigabit Ethernet QSFP56/QSFP-DD port
- Interoperable with other IEEE-compliant 200GBASE interfaces where applicable
- Certified and tested on Dell, Mellanox QSFP56/QSFP-DD 200G ports for superior performance, quality, and reliability. For more details, refer to the FS Assured Program for Transceivers
- High-speed electrical interface of modules compliant to IEEE 802.3bs

Table1 describes the QSFP56/QSFP-DD 200G portfolio.

Table 1. QSFP56/QSFP–DD–200G portfolio

Product	Description	Connector type
QSFP-SR4-200G	200GBASE SR4 QSFP56 Transceiver, MTP/MPO, 100m over OM4 MMF	MTP/MPO-12 UPC (12fibers)
QSFP-FR4-200G	200GBASE FR4 QSFP56 Transceiver, LC, 2km over SMF	Duplex LC
QDD-SR4-2x100G	200GBASE 2SR4 QSFP56 Transceiver, MTP/MPO, 100m over MMF	MTP/MPO-24 (24fibers)
QSFP-LR4-200G	200GBASE LR4 QSFP56 Transceiver, LC, 10km over SMF	Duplex LC

Copyright © 2022 FS.COM All Rights Reserved

Product	Description	Connector type
QSFP-200G-PCxxx (0.5M, 1M, 1.5M, 2M, 3M)	200GBASE QSFP56 Passive Direct Attach Copper Twinax Cable	-
QSFP-200G-ACxxx (3M, 5M, 7M)	200GBASE QSFP56 Active Direct Attach Copper Twinax Cable	-
QDD-200G-PCxxx (0.5M, 1M, 1.5M, 2M, 2.5M, 3M)	200GBASE QSFP-DD Passive Direct Attach Copper Twinax Cable	-
QSFP-200G-2QPCxxx (0.5M, 1M, 1.5M, 2M, 2.5M, 3M)	200GBASE QSFP56 to 2x 100G QSFP56 Passive Direct Attach Copper Breakout Cable	-
QSFP-200G-2QACxxx (3M, 5M, 7M)	200GBASE QSFP56 to 2x 100G QSFP56 Active Direct Attach Copper Breakout Cable	-
QDD-200G-2Q4xNPCxxx (0.5M, 1M, 2M, 3M)	200GBASE QSFP-DD to 2x 100G QSFP28 Passive Direct Attach Copper Breakout Cable	-
QSFP-200G-4SPCxxx (0.5M, 1M, 2M, 3M)	200GBASE QSFP56 to 4x 50G SFP56 Passive Direct Attach Copper Breakout Cable	-
QDD-200G-8SPCxxx (0.5M, 1M, 1.5M, 2M,2.5M, 3M)	200GBASE QSFP-DD to 8x 25G SFP28 Passive Direct Attach Copper Breakout Cable	-
QSFP-200G-AOxxx (1M, 2M, 3M, 5M, 10M, 15M, 20M, 30M, 50M, 100M)	200GBASE QSFP56 Active Optical Cable	-
QSFP-200G-2QAOxxx (1M, 2M, 3M, 5M, 10M, 15M, 20M, 30M)	200GBASE QSFP56 to 2x100G QSFP56 Active Optical Cable	-
QDD-200G-AOxxx (1M, 3M, 5M, 7M, 10M, 15M, 20M, 30M, 50M, 100M)	200GBASE QSFP-DD Active Optical Cable	-
QDD-200G-8LCAOxxx-E (1M, 3M, 5M, 7M, 10M, 15M, 20M, 25M, 30M, 50M, 70M)	200GBASE QSFP-DD to 8x25G LC Duplex Active Optical Cable	-
QDD-200G-2Q4xNAOxxx (1M, 3M, 5M, 7M, 10M, 15M, 20M, 25M, 30M, 50M, 100M)	200BASE QSFP-DD to 2xQSFP28 Active Optical Breakout Cable	-
QDD-200G-8SAOxxx (1M, **2M,** 3M, 5M, 7M, 10M, 15M, 20M, 25M, 30M, 50M, 70M)	200GBASE QSFP-DD to 8x25G SFP28 Active Optical Breakout Cable	-

QSFP-SR4-200G

The QSFP-SR4-200G Module supports link lengths of up to 100m over OM4 Multimode Fiber with MTP/MPO connectors. It primarily enables high-bandwidth 200G optical links over 12-fiber parallel feiber terminated with MTP/MPO multifiber connectors. QSFP-SR4-200G supports 200GBase Ethernet rate.

QSFP-FR4-200G

The QSFP-FR4-200G Module supports link lengths of up to 2km over a standard pair of G.652 Single-ModeFiber (SMF) with duplex LC connectors. The 200Gigabit Ethernet signal is carried over a single wavelength usingo nboard PAM4 modulation and FEC.

QDD-SR4-2x100G

The QDD-SR4-2x100G Module supports link lengths of up to 100 mover multimode fiber (MMF)with MTP/MPO-24 connectors. It is suitable for 2×100GBASE-SR4 Ethernet, Data Centers and Switch & Router Connections.

Copyright © 2022 FS.COM All Rights Reserved

QSFP-LR4-200G

The QSFP-LR4-200G Module supports link lengths of up to 10km over a standard pair of G.652 Single-ModeFiber (SMF) with duplex LC connectors. The 200Gigabit Ethernet signal is carried over a single wavelength using onboard PAM4 modulation and FEC. The hot swappable transceiver is suitable for 200G Ethernet, Data Center, and 5G backhaul.

QSFP-200G-PCxxx

QSFP-200G-PCxxx copper direct-attach 200GBASE cables (Figure2) are suitable for very short links and offer a cost-effective way to establish a 200-Gigabit link between QSFP56-200G ports of switches/routers within racks and across adjacent racks. FS currently offers passive copper cables in lengths of x=0.5, 1, 1.5, 2, 3 meters.



Figure 2.
QSFP-200G-PCxxx cables

QSFP-200G-ACxxx

QSFP-200G-ACxxx copper direct-attach 200GBASE cables(Figure3)are suitable for very short links and offer acost-effective way to establish a 200-Gigabit link between QSFP56-200G ports of switches/routers/storages within racks and across adjacent racks. FS currently offers active copper cables in lengths of x = 3, 5, 7 meters.



Figure 3.
QSFP-200G-ACxxx cables

Copyright © 2022 FS.COM All Rights Reserved

QDD-200G-PCxxx

QDD-200G-PCxxx copper direct-attach 200GBASE cables (Figure4) are suitable for very short links and offer a cost-effective way to establish a 200-Gigabit link between 200G QSFP-DD ports of switches/routers within racks and across adjacent racks. FS currently offers passive copper cables in lengths of x = 0.5, 1, 1.5, 2, 2.5, 3 meters.



Figure 4.
QDD-200G-PCxxx cables

QSFP-200G-2QPCxxx

QSFP56-200G to two QSFP56-100G passive copper direct-attach breakout cables (Figure5) are suitable for very short links and offer a cost-effective way to connect within racks and across adjacent racks. These breakout cables connect to a 200G QSFP56 port of a switch on one end and to two 100G QSFP56 ports on the other end. FS currently offers passive copper cables in lengths of x= 0.5, 1, 1.5, 2, 2.5, and 3 meters.



Figure 5.
QSFP-200G-2QPCxxx cables

Copyright © 2022 FS.COM All Rights Reserved

QSFP-200G-2QACxxx

QSFP56-200G to two QSFP56-100G active copper direct-attach breakout cables (Figure6) is a high-speed, cost-effective alternative to fiber optics in 200Gb/s applications. These breakout cables connect to a 200G QSFP56 port of a switch on one end and to two 100G QSFP56 ports on the other end. FS currently offers active copper cables in lengths of x= 3, 5, and 7 meters.



Figure 6.
QSFP-200G-2QACxxx cables

QDD-200G-2Q4xNPCxxx

QSFPDD-200G to two QSFP28-100G passive copper direct-attach breakout cables(Figure7) is a high-speed, cost-effective alternative to fiber optics in 200Gb/s applications. These breakout cables connect to a 200G QSFPDD port of a switch on one end and to two 100G QSFP28 ports on the other end. FS currently offers passive copper cables in lengths of x= 0.5, 1, 2, and 3 meters.



Figure 7.
QDD-200G-2Q4xNPCxxx cables

Copyright © 2022 FS.COM All Rights Reserved

QSFP-200G-4SPCxxx

QSFP56-200G to four SFP56-50G passive copper direct-attach breakout cables (Figure8) are suitable for cost-effective close-range interconnections within the equipment room. These breakout cables connect to a 200G QSFP56 port of a switch on one end and to four 50G SFP56 ports on the other end. FS currently offers passive copper cables in lengths of x= 0.5, 1, 2, and 3 meters.



Figure 8.
QSFP-200G-4SPCxxx cables

QDD-200G-8SPCxxx

QSFP-DD-200G to eight SFP28 passive copper direct-attach breakout cables (Figure9)are suitab for very short distances, and offers a highly cost-effective ethernet connectivity solution for the interconnection between devices using 200G QSFPDD ports on one end and eight 25G SFP28 ports on the other end. FS currently offers passive copper cables in lengths of x= 0.5, 1, 1.5, 2, 2.5, and 3 meters.



Figure 9.
QDD-200G-8SPCxxx cables

Copyright © 2022 FS.COM All Rights Reserved

QSFP-200G-AOxxx

QSFP56-200G to QSFP56-200G AOC cables (Figure 10) are suitable for short distances and offer a flexible way to connect within racks and across racks. Active optical cables are much thinner and lighter than copper cables, which makes cable management easier. AOCs enable efficient system airflow, which is critical in high - density racks. FS currently offers active optical cables in lengths of x= 1, 2, 3, 5, 10, 15, 20, 30, 50 and 100 meters.



Figure 10.
QSFP-200G-AOxxx cables

QSFP-200G-2QAOxxx

QSFP56-200G to two QSFP56-100G AOC cables (Figure 11) are suitable for short distances and offer a flexible way to connect within racks and across racks. Active optical cables are much thinner and lighter than copper cables, which makes cable management easier. AOCs enable efficient system airflow, which is critical in high-density racks. FS currently offers active optical cables in lengths of x= 1, 2, 3, 5, 10, 15, 20 and 30 meters.

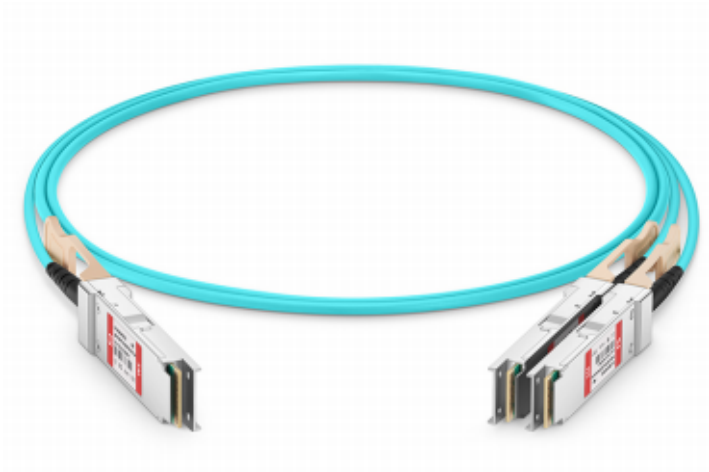

Figure 11.
QSFP-200G-2QAOxxx cables

Copyright © 2022 FS.COM All Rights Reserved

QDD-200G-AOxxx

QSFP-DD to QSFP-DD 200G AOC cables (Figure 12) are suitable for short distances and offer a flexible way to connect within racks and across racks. Active optical cables are much thinner and lighter than copper cables, which makes cable management easier. AOCs enable efficient system airflow, which is critical in high - density racks. FS currently offers active optical cables in lengths of x= 1, 3, 5, 7, 10, 15, 20, 30, 50 and 70 meters.

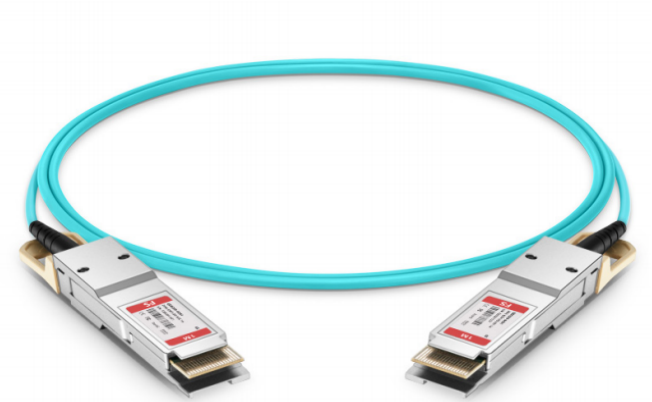

Figure 12.

QDD-200G-AOxxx cables

QDD-200G-8LCAOxxx-E

QSFP-DD to 8x25G LC Duplex AOC cables (Figure 13) are suitable for short distances and offer a flexible way to connect within racks and across racks. Active optical cables are much thinner and lighter than copper cables, which makes cable management easier. AOCs enable efficient system airflow, which is critical in high - density racks. FS currently offers active optical cables in lengths of xx= 1, 3, 5, 7, 10, 15, 20, 25, 30, 50 and 70 meters.



Figure 13.

QDD-200G-8LCAOxxx-E cables

Copyright © 2022 FS.COM All Rights Reserved

QDD-200G-2Q4xNAOxxx

200G QSFP-DD to 2x QSFP28200G AOC cables (Figure 14) are suitable for short distances and offer a flexible way to connect within racks and across racks. Active optical cables are much thinner and lighter than copper cables, which makes cable management easier. AOCs enable efficient system airflow, which is critical in high -density racks. FS currently offers active optical cables in lengths of x= 1, 3, 5, 7, 10, 15, 20, 25, 30, 50 and 70 meters.

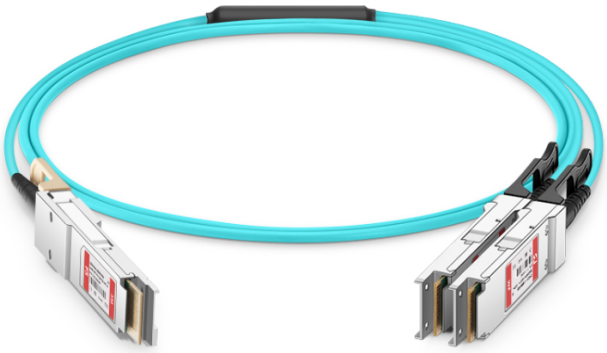

Figure 14.
QDD-200G-2Q4xNAOxxx cables

QDD-200G-8SAOxxx

200G QSFP-DD to 8x SFP28200G AOC cables (Figure 14) are suitable for short distances and offer a flexible way to connect within racks and across racks. Active optical cables are much thinner and lighter than copper cables, which makes cable management easier. AOCs enable efficient system airflow, which is critical in high -density racks. FS currently offers active optical cables in lengths of x= 1, 2, 3, 5, 7, 10, 15, 20, 25, 30, 50 and 70 meters.



Figure 14.
QDD-200G-8SAOxxx cables

Copyright © 2022 FS.COM All Rights Reserved

Product Specifications

Table 2 shows the key electrical characteristics for the 200G QSFP56/QSFP-DD modules.

Table 2. Electrical specifications

Product	Description	Nominal datarate (Gbs)	High-speed electrical	Link meter
QSFP-SR4-200G	200GBASE SR4 QSFP56 Transceiver, MTP/MPO, 100m over OM4 MMF	200Gbps	200G GAUI-4	100m
QSFP-FR4-200G	200GBASE FR4 QSFP56 Transceiver, LC, 2km over SMF	200Gbps	200G GAUI-4	2km
QDD-SR4-2x100G	200GBASE2 SR4 QSFP56 Transceiver, MTP/MPO, 100m over MMF	200Gbps	200G GAUI-4	100m
QSFP-LR4-200G	200GBASE LR4 QSFP56 Transceiver, LC, 10km over SMF	200Gbps	200G GAUI-4	10km
QSFP-200G-PCxxx (0.5M, 1M, 1.5M, 2M, 3M)	200GBASE QSFP56 Passive Direct Attach Copper Twinax Cable	200Gbps	-	0.5, 1, 2, 3
QSFP-200G-ACxxx (3M, 5M, 7M)	200GBASE QSFP56 Active Direct Attach Copper Twinax Cable	200Gbps	-	3, 5, 7
QDD-200G-PCxxx (0.5M, 1M, 1.5M, 2M, 2.5M, 3M)	200GBASE QSFP-DD Passive Direct Attach Copper Twinax Cable	200Gbps	-	0.5, 1, 1.5, 2, 2.5, 3
QSFP-200G-2QPCxxx (0.5M, 1M, 1.5M, 2M, 2.5M, 3M)	200GBASE QSFP56 to 2x 100G QSFP56 Passive Direct Attach Copper Breakout Cable	200Gbps	-	0.5, 1, 1.5, 2, 2.5, 3
QSFP-200G-2QACxxx (3M, 5M, 7M)	200GBASE QSFP56 to 2x 100G QSFP56 Active Direct Attach Copper Breakout Cable	200Gbps	-	3, 5, 7
QDD-200G-2Q4xNPCxxx (0.5M, 1M, 2M, 3M)	200GBASE QSFP-DD to 2x 100G QSFP28 Passive Direct Attach Copper Breakout Cable	200Gbps	-	0.5, 1, 2, 3
QSFP-200G-4SPCxxx (0.5M, 1M, 2M, 3M)	200GBASE QSFP56 to 4x 50G SFP56 Passive Direct Attach Copper Breakout Cable	200Gbps	-	0.5, 1, 2, 3
QDD-200G-8SPCxxx (0.5M, 1M, 1.5M, 2M, 2.5M, 3M)	200GBASE QSFP-DD to 8x 25G SFP28 Passive Direct AttachCopper Breakout Cable	200Gbps	-	0.5, 1, 1.5, 2, 2.5, 3
QSFP-200G-AOxxx (1M, 2M, 3M, 5M, 10M, 15M, 20M, 30M, 50M, 100M)	200GBASE QSFP56 Active Optical Cable	200Gbps	200G GAUI-4	1, 2, 3, 5, 10, 15, 20, 30, 50, 100
QSFP-200G-2QAOxxx (1M, 2M, 3M, 5M, 10M, 15M, 20M, 30M)	200GBASE QSFP56 to 2x 100G QSFP56 Active Optical Cable	200Gbps	200G GAUI-4	1, 2, 3, 5, 10, 15, 20, 30
QDD-200G-AOxxx (1M, 3M, 5M, 7M, 10M, 15M, 20M, 30M, 50M, 70M)	200GBASE QSFP-DD Active Optical Cable	200Gbps	-	1, 3, 5, 7, 10, 15, 20, 30, 50, 70
QDD-200G-8LCAOxxx-E (1M, 3M, 5M, 7M, 10M,15M, 20M, 25M, 30M, 50M, 70M)	200GBASE QSFP-DD to 8x25G LC Duplex Active Optical Cable	200Gbps	200G GAUI-4	1, 3, 5, 7, 10, 15, 20, 25, 30, 50, 70
QDD-200G-2Q4xNAOxxx (1M, 3M, 5M, 7M, 10M, 15M, 20M, 25, 30M, 50M, 70M)	200GBASE QSFP-DD to 2xQSFP28 Active Optical Breakout Cable	200Gbps	200GGAUI-8	1, 3, 5, 7, 10, 15, 20, 25, 30, 50, 70
QDD-200G-8SAOxxx (1M, 2M, 3M, 5M, 7M, 10M, 15M, 20M, 25M, 30M, 50M, 70M)	200GBASE QSFP-DD to 8x25G SFP28 Active Optical Breakout Cable	200Gbps	200GGAUI-8	1, 2, 3, 5, 7, 10, 15, 20, 25, 30, 50, 70

Copyright © 2022 FS.COM All Rights Reserved

Table3 shows the key optical characteristics for the 200G QSFP56/QSFP-DD modules.

Table 3. Optical specifications

Product	Description	Transmit Power (dBm) per lane		Receive Power (dBm) per lane		Transmit and Receive Wavelength (nm)
		Minimum	Maximum	Minimum	Maximum	
QSFP-SR4-200G	200GBASE SR4 QSFP56 Transceiver, MTP/MPO, 100m over OM4 MMF	-3	3	-8.4	4	850
QSFP-FR4-200G	200GBASE FR4 QSFP56 Transceiver, LC, 2km overSMF	-4.2	4.7	-8.2	4.7	1271, 1291, 1310, 1311 and 1331
QDD-SR4-2x100G	200GBASE 2SR4 QSFP56 Transceiver, MTP/MPO, 100m over MMF	-8.4	2.4	-10.3	2.4	850
QSFP-LR4-200G	200GBASE LR4 QSFP56 Transceiver, LC, 10km over SMF	-3.4	5.3	-9.7	5.3	1310

Table4 shows the mechanical characteristics for the 200G QSFP56/QSFP-DD modules.

Table 4. Mechanical specifications

Parameter	Product	Weight
Module dimension with pull tab	(H x W x D) 8.5 x 18.35 x 123.41mm	
Module weight (Max)	Optical modules	54 g
	QSFP-200G-PC005	160 g
	QSFP-200G-PC01	168 g
	QSFP-200G-PC015	226 g
	QSFP-200G-PC02	184 g
	QSFP-200G-PC03	400g
	QSFP-200G-AC03	280g
	QSFP-200G-AC05	412 g
	QSFP-200G-AC07	422 g

Copyright © 2022 FS.COM All Rights Reserved

Parameter	Product	Weight
Module weight (Max)	QDD-200G-PC005	144 g
	QDD-200G-PC01	201 g
	QDD-200G-PC015	227 g
	QDD-200G-PC02	316 g
	QDD-200G-PC025	358 g
	QDD-200G-PC03	344g
	QSFP-200G-2QPC005	400 g
	QSFP-200G-2QPC01	120 g
	QSFP-200G-2QPC015	120 g
	QSFP-200G-2QPC02	144 g
	QSFP-200G-2QPC025	168 g
	QSFP-200G-2QPC03	200 g
	QSFP-200G-2QAC03	579 g
	QSFP-200G-2QAC05	747 g
	QSFP-200G-2QAC07	915 g
	QDD-200G-2Q4xNPC005	233 g
	QDD-200G-2Q4xNPC01	311 g
	QDD-200G-2Q4xNPC02	520 g
	QDD-200G-2Q4xNPC03	777 g
	QSFP-200G-4SPC005	172 g
	QSFP-200G-4SPC01	206 g
	QSFP-200G-4SPC02	273 g
	QSFP-200G-4SPC03	488 g

Copyright © 2022 FS.COM All Rights Reserved

Parameter	Product	Weight
Module weight (Max)	QDD-200G-8SPC005	240 g
	QDD-200G-8SPC01	288 g
	QDD-200G-8SPC015	368 g
	QDD-200G-8SPC02	424 g
	QDD-200G-8SPC025	504 g
	QDD-200G-8SPC03	560 g
	QSFP-200G-AO01	100 g
	QSFP-200G-AO02	104 g
	QSFP-200G-AO03	280 g
	QSFP-200G-AO05	480 g
	QSFP-200G-AO10	960 g
	QSFP-200G-AO15	1120 g
	QSFP-200G-AO20	1280 g
	QSFP-200G-AO30	1760 g
	QSFP-200G-AO50	2720 g
	QSFP-200G-AO100	5440 g
	QSFP-200G-2QAO01	136 g
	QSFP-200G-2QAO02	144 g
	QSFP-200G-2QAO03	296 g
	QSFP-200G-2QAO05	496 g
	QSFP-200G-2QAO10	1000g
	QSFP-200G-2QAO15	1504 g
	QSFP-200G-2QAO20	2008 g
	QSFP-200G-2QAO30	2736 g

Copyright © 2022 FS.COM All Rights Reserved

Parameter	Product	Weight
Module weight (Max)	QDD-200G-AO01	114 g
	QDD-200G-AO03	130 g
	QDD-200G-AO05	146 g
	QDD-200G-AO07	162 g
	QDD-200G-AO10	186 g
	QDD-200G-AO15	226 g
	QDD-200G-AO20	266 g
	QDD-200G-AO30	346 g
	QDD-200G-AO50	506 g
	QDD-200G-AO70	666 g
	QDD-200G-8LCAO01-E	180 g
	QDD-200G-8LCAO03-E	210 g
	QDD-200G-8LCAO05-E	230 g
	QDD-200G-8LCAO07-E	260 g
	QDD-200G-8LCAO10-E	300 g
	QDD-200G-8LCAO15-E	370 g
	QDD-200G-8LCAO20-E	430 g
	QDD-200G-8LCAO25-E	500 g
	QDD-200G-8LCAO30-E	570 g
	QDD-200G-8LCAO50-E	830 g
	QDD-200G-8LCAO70-E	1100 g
	QDD-200G-2Q4xNAO01	161.4 g
	QDD-200G-2Q4xNAO03	209 g
	QDD-200G-2Q4xNAO05	253 g
	QDD-200G-2Q4xNAO07	285 g
	QDD-200G-2Q4xNAO010	333 g
	QDD-200G-2Q4xNAO015	413 g
	QDD-200G-2Q4xNAO020	493 g
	QDD-200G-2Q4xNAO025	573 g
	QDD-200G-2Q4xNAO030	653 g

Copyright © 2022 FS.COM All Rights Reserved

Parameter	Product	Weight
Module weight (Max)	QDD-200G-2Q4xNAO050	973 g
	QDD-200G-2Q4xNAO070	1293 g
	QDD-200G-8SAO01	305.2 g
	QDD-200G-8SAO02	388.4 g
	QDD-200G-8SAO03	462 g
	QDD-200G-8SAO05	590 g
	QDD-200G-8SAO07	622 g
	QDD-200G-8SAO10	670 g
	QDD-200G-8SAO15	750 g
	QDD-200G-8SAO20	910 g
	QDD-200G-8SAO25	830 g
	QDD-200G-8SAO30	990 g
	QDD-200G-8SAO50	1310 g
	QDD-200G-8SAO70	1630 g
QSFP56/QSFPDD-100G module operation temperature	0 to 70°C	-
Active optical cable	0 to 70°C	-
Copper cable operation temperature	0 to 70°C	-
Storage temperature	-40 to 85°C	-

Warranty

- Standard warranty: 5 years
- For more information for FS Returns & Refund spolicy, visit https://www.fs.com/policies/warranty.html or https://www.fs.com/policies/day_return_policy.html

Copyright © 2022 FS.COM All Rights Reserved

Ordering information

Table 5 provides the ordering information for 200G QSFP56/QSFP-DD modules and related cables.

Table 5. Ordering information

Part number	Description
QSFP56/QSFP-DD opticsmodules	
QSFP-SR4-200G	200GBASE SR4 QSFP56 Transceiver, MTP/MPO, 100m over OM4 MMF
QSFP-FR4-200G	200GBASE FR4 QSFP56 Transceiver, LC, 2km over SMF
QDD-SR4-2x100G	200GBASE 2SR4 QSFP56 Transceiver, MTP/MPO,100m over MMF
QSFP-LR4-200G	200GBASE LR4 QSFP56 Transceiver, LC,10km over SMF
QSFP56/QSFP-DD direct-attach copper modules	
QSFP-200G-PC005	200GBASE QSFP56 Passive Copper Cable, 0.5-meter
QSFP-200G-PC01	200GBASE QSFP56 Passive Copper Cable, 1-meter
QSFP-200G-PC015	200GBASE QSFP56 Passive Copper Cable, 1.5-meter
QSFP-200G-PC02	200GBASE QSFP56 Passive Copper Cable, 2-meter
QSFP-200G-PC03	200GBASE QSFP56 Passive Copper Cable, 3-meter
QSFP-200G-AC03	200GBASE QSFP56 Active Copper Cable, 3-meter
QSFP-200G-AC05	200GBASE QSFP56 Active Copper Cable, 5-meter
QSFP-200G-AC07	200GBASE QSFP56 Active Copper Cable, 7-meter
QDD-200G-PC005	200GBASE QSFP-DD Passive Copper Cable, 0.5-meter
QDD-200G-PC01	200GBASE QSFP-DD Passive Copper Cable, 1-meter
QDD-200G-PC015	200GBASE QSFP-DD Passive Copper Cable, 1.5-meter
QDD-200G-PC02	200GBASE QSFP-DD Passive Copper Cable, 2-meter
QDD-200G-PC025	200GBASE QSFP-DD Passive Copper Cable, 2.5-meter
QDD-200G-PC03	200GBASE QSFP-DD Passive Copper Cable, 3-meter

Copyright © 2022 FS.COM All Rights Reserved

Part number	Description
QSFP56/QSFP-DD direct-attach copper modules	
QSFP-200G-2QPC005	200GBASE QSFP56 to 2x QSFP56 100G Passive Copper Cables, 0.5-meter
QSFP-200G-2QPC01	200GBASE QSFP56 to 2x QSFP56 100G Passive Copper Cables, 1-meter
QSFP-200G-2QPC015	200GBASE QSFP56 to 2x QSFP56 100G Passive Copper Cables, 1.5-meter
QSFP-200G-2QPC02	200GBASE QSFP56 to 2x QSFP56 100G Passive Copper Cables, 2-meter
QSFP-200G-2QPC025	200GBASE QSFP56 to 2x QSFP56 100G Passive Copper Cables, 2.5-meter
QSFP-200G-2QPC03	200GBASE QSFP56 to 2x QSFP56 100G Passive Copper Cables, 3-meter
QSFP-200G-2QAC03	200GBASE QSFP56 to 2x QSFP56 100G Active Copper Cables, 3-meter
QSFP-200G-2QAC05	200GBASE QSFP56 to 2x QSFP56 100G Active Copper Cables, 5-meter
QSFP-200G-2QAC07	200GBASE QSFP56 to 2x QSFP56 100G Active Copper Cables, 7-meter
QDD-200G-2Q4xNPC005	200GBASE QSFP-DD to 2x QSFP28 100G Passive Copper Cable, 0.5-meter
QDD-200G-2Q4xNPC01	200GBASE QSFP-DD to 2x QSFP28 100G Passive Copper Cable, 1-meter
QDD-200G-2Q4xNPC02	200GBASE QSFP-DD to 2x QSFP28 100G Passive Copper Cable, 2-meter
QDD-200G-2Q4xNPC03	200GBASE QSFP-DD to 2x QSFP28 100G Passive Copper Cable, 3-meter
QSFP-200G-4SPC005	200GBASE QSFP56 to 4x SFP56 50G Passive Copper Cable, 0.5-meter
QSFP-200G-4SPC01	200GBASE QSFP56 to 4x SFP56 50G Passive Copper Cable, 1-meter
QSFP-200G-4SPC02	200GBASE QSFP56 to 4x SFP56 50G Passive Copper Cable, 2-meter
QSFP-200G-4SPC03	200GBASE QSFP56 to 4x SFP56 50G Passive Copper Cable, 3-meter
QDD-200G-8SPC005	200GBASE QSFP-DD to 8x SFP28 25G Passive Copper Cable, 0.5-meter
QDD-200G-8SPC01	200GBASE QSFP-DD to 8x SFP28 25G Passive Copper Cable, 1-meter
QDD-200G-8SPC015	200GBASE QSFP-DD to 8x SFP28 25G Passive Copper Cable, 1.5-meter
QDD-200G-8SPC02	200GBASE QSFP-DD to 8x SFP28 25G Passive Copper Cable, 2-meter
QDD-200G-8SPC025	200GBASE QSFP-DD to 8x SFP28 25G Passive Copper Cable, 2.5-meter
QDD-200G-8SPC03	200GBASE QSFP-DD to 8x SFP28 25G Passive Copper Cable, 3-meter

Copyright © 2022 FS.COM All Rights Reserved

Part number	Description
QSFP56/QSFP-DD direct-attach copper modules	
QSFP-200G-AO01	200GBASE QSFP56 Active Optical Cables, 1-meter
QSFP-200G-AO02	200GBASE QSFP56 Active Optical Cables, 2-meter
QSFP-200G-AO03	200GBASE QSFP56 Active Optical Cables, 3-meter
QSFP-200G-AO05	200GBASE QSFP56 Active Optical Cables, 5-meter
QSFP-200G-AO10	200GBASE QSFP56 Active Optical Cables, 10-meter
QSFP-200G-AO15	200GBASE QSFP56 Active Optical Cables, 15-meter
QSFP-200G-AO20	200GBASE QSFP56 Active Optical Cables, 20-meter
QSFP-200G-AO30	200GBASE QSFP56 Active Optical Cables, 30-meter
QSFP-200G-AO50	200GBASE QSFP56 Active Optical Cables, 50-meter
QSFP-200G-AO100	200GBASE QSFP56 Active Optical Cables, 100-meter
QSFP-200G-2QAO01	200GBASE QSFP56 to 2x QSFP56 100G Active Optical Cables, 1-meter
QSFP-200G-2QAO02	200GBASE QSFP56 to 2x QSFP56 100G Active Optical Cables, 2-meter
QSFP-200G-2QAO03	200GBASE QSFP56 to 2x QSFP56 100G Active Optical Cables, 3-meter
QSFP-200G-2QAO05	200GBASE QSFP56 to 2x QSFP56 100G Active Optical Cables, 5-meter
QSFP-200G-2QAO10	200GBASE QSFP56 to 2x QSFP56 100G Active Optical Cables, 10-meter
QSFP-200G-2QAO15	200GBASE QSFP56 to 2x QSFP56 100G Active Optical Cables, 15-meter
QSFP-200G-2QAO20	200GBASE QSFP56 to 2x QSFP56 100G Active Optical Cables, 20-meter
QSFP-200G-2QAO30	200GBASE QSFP56 to 2x QSFP56 100G Active Optical Cables, 30-meter
QDD-200G-AO01	200GBASE QSFP-DD Active Optical Cables, 1-meter
QDD-200G-AO03	200GBASE QSFP-DD Active Optical Cables, 3-meter
QDD-200G-AO05	200GBASE QSFP-DD Active Optical Cables, 5-meter
QDD-200G-AO07	200GBASE QSFP-DD Active Optical Cables, 7-meter
QDD-200G-AO10	200GBASE QSFP-DD Active Optical Cables, 10-meter

Copyright © 2022 FS.COM All Rights Reserved

Part number	Description
QSFP56/QSFP-DD direct-attach copper modules	
QDD-200G-AO15	200GBASE QSFP-DD Active Optical Cables, 15-meter
QDD-200G-AO20	200GBASE QSFP-DD Active Optical Cables, 20-meter
QDD-200G-AO30	200GBASE QSFP-DD Active Optical Cables, 30-meter
QDD-200G-AO50	200GBASE QSFP-DD Active Optical Cables, 50-meter
QDD-200G-AO70	200GBASE QSFP-DD Active Optical Cables, 70-meter
QDD-200G-8LCAO1-E	200GBASE QSFP-DD to 8x25G LC Duplex Breakout Active Optical Cable, 1-meter
QDD-200G-8LCAO03-E	200GBASE QSFP-DD to 8x25G LC Duplex Breakout Active Optical Cable, 3-meter
QDD-200G-8LCAO05-E	200GBASE QSFP-DD to 8x25G LC Duplex Breakout Active Optical Cable, 5-meter
QDD-200G-8LCAO07-E	200GBASE QSFP-DD to 8x25G LC Duplex Breakout Active Optical Cable, 7-meter
QDD-200G-8LCAO10-E	200GBASE QSFP-DD to 8x25G LC Duplex Breakout Active Optical Cable, 10-meter
QDD-200G-8LCAO15-E	200GBASE QSFP-DD to 8x25G LC Duplex Breakout Active Optical Cable, 15-meter
QDD-200G-8LCAO20-E	200GBASE QSFP-DD to 8x25G LC Duplex Breakout Active Optical Cable, 20-meter
QDD-200G-8LCAO25-E	200GBASE QSFP-DD to 8x25G LC Duplex Breakout Active Optical Cable, 25-meter
QDD-200G-8LCAO30-E	200GBASE QSFP-DD to 8x25G LC Duplex Breakout Active Optical Cable, 30-meter
QDD-200G-8LCAO50-E	200GBASE QSFP-DD to 8x25G LC Duplex Breakout Active Optical Cable, 50-meter
QDD-200G-8LCAO70-E	200GBASE QSFP-DD to 8x25G LC Duplex Breakout Active Optical Cable, 70-meter
QDD-200G-2Q4xNAO01	200GBASE QSFP-DD to 2xQSFP28 100G Active Optical Cables, 1-meter
QDD-200G-2Q4xNAO03	200GBASE QSFP-DD to 2xQSFP28 100G Active Optical Cables, 3-meter
QDD-200G-2Q4xNAO05	200GBASE QSFP-DD to 2xQSFP28 100G Active Optical Cables, 5-meter
QDD-200G-2Q4xNAO07	200GBASE QSFP-DD to 2xQSFP28 100G Active Optical Cables, 7-meter
QDD-200G-2Q4xNAO10	200GBASE QSFP-DD to 2xQSFP28 100G Active Optical Cables, 10-meter
QDD-200G-2Q4xNAO15	200GBASE QSFP-DD to 2xQSFP28 100G Active Optical Cables, 15-meter
QDD-200G-2Q4xNAO20	200GBASE QSFP-DD to 2xQSFP28 100G Active Optical Cables, 20-meter

Copyright © 2022 FS.COM All Rights Reserved

Part number	Description
QSFP56/QSFP-DD direct-attach copper modules	
QDD-200G-2Q4xNAO25	200GBASE QSFP-DD to 2xQSFP28 100G Active Optical Cables, 25-meter
QDD-200G-2Q4xNAO30	200GBASE QSFP-DD to 2xQSFP28 100G Active Optical Cables, 30-meter
QDD-200G-2Q4xNAO50	200GBASE QSFP-DD to 2xQSFP28 100G Active Optical Cables, 50-meter
QDD-200G-2Q4xNAO70	200GBASE QSFP-DD to 2xQSFP28 100G Active Optical Cables, 70-meter
QDD-200G-8SAO01	200GBASE QSFP-DD to 8xSFP28 25G Active Optical Cables, 1-meter
QDD-200G-8SAO02	200GBASE QSFP-DD to 8xSFP28 25G Active Optical Cables, 2-meter
QDD-200G-8SAO03	200GBASE QSFP-DD to 8xSFP28 25G Active Optical Cables, 3-meter
QDD-200G-8SAO05	200GBASE QSFP-DD to 8xSFP28 25G Active Optical Cables, 5-meter
QDD-200G-8SAO07	200GBASE QSFP-DD to 8xSFP28 25G Active Optical Cables, 7-meter
QDD-200G-8SAO10	200GBASE QSFP-DD to 8xSFP28 25G Active Optical Cables, 10-meter
QDD-200G-8SAO15	200GBASE QSFP-DD to 8xSFP28 25G Active Optical Cables, 15-meter
QDD-200G-8SAO20	200GBASE QSFP-DD to 8xSFP28 25G Active Optical Cables, 20-meter
QDD-200G-8SAO25	200GBASE QSFP-DD to 8xSFP28 25G Active Optical Cables, 25-meter
QDD-200G-8SAO30	200GBASE QSFP-DD to 8xSFP28 25G Active Optical Cables, 30-meter
QDD-200G-8SAO50	200GBASE QSFP-DD to 8xSFP28 25G Active Optical Cables, 50-meter
QDD-200G-8SAO70	200GBASE QSFP-DD to 8xSFP28 25G Active Optical Cables, 70-meter

Copyright © 2022 FS.COM All Rights Reserved

Regulatory and standards compliance

Standards

- SFF-8665: QSFP28+28Gb/s 4X Pluggable Transceiver Solution (QSFP28)
- CMIS Rev 4.0: Common Management Interface
- SFF-8679: Management Interface for Cabled Environments
- SFF–8024: SFF Module Management Reference Code Tables
- 802.3™-2012IEEE Standard for Ethernet
- IEEE802.3ba Amendment of IEEEStd802.3
- IEEE802.3bm Amendment of IEEEStd802.3
- GR-20-CORE: Generic Requirements for Optical Fiber and Optical Fiber Cable
- GR-326-CORE: Generic Requirements for Single-Mode Optical Connectors and Jumper Assemblies
- GR-468-CORE: Generic Requirements for Optoelectronic Devices Used in Telecommunications Equipmet
- GR-1435-CORE: Generic Requirements for Multifiber Optical Connectors
- RoHS 6

Safety

- Modules are compliant with Laser Class1 as defined in IEC 60825-1, IEC 60825-2 and Comply with 21 CFR 1040.10 and 1040.11

Copyright © 2022 FS.COM All Rights Reserved

Table 6. Laser class for the QSFP56/QSFP-DD 200G optical modules

Product	Laser class
QSFP-SR4-200G	1
QSFP-FR4-200G	1
QDD-SR4-2x100G	1
QSFP-LR4-200G	1

Additional information

For more information about 200GBASE QSFP56/QSFP-DD optics and copper modules, contact your account manager or visit https://www.fs.com/c/fiber-optic-transceivers-9

Document history

New or revised topic	Described in	Date
200GBASE QSFP56/QSFPDD-200G Modules Data Sheet	Updated all	26/12/2022
200GBASE QSFP56/QSFPDD-200G Modules Data Sheet	Add QDD-200G-2Q4xNAOxxx	15/4/2023
200GBASE QSFP56/QSFPDD-200G Modules Data Sheet	Add QDD-200G-8LCAOxxx-E	17/4/2023
200GBASE QSFP56/QSFPDD-200G Modules Data Sheet	Add QDD-200G-8SAOxxx	27/4/2023

Copyright © 2022 FS.COM All Rights Reserved

Shenzhen (China)

Address: 24F, Yingfeng Center, Haitian 2nd Rd, Nanshan District, Shenzhen
Tel: +86 (755) 8357 1351
Email: sales@feisu.com

Wuhan (China)

Address: 9-14F, Optical Valley Software Park A7, Guanshan Ave, Wuhan
Tel: +86 (027) 8808 9195
Email: sales@feisu.com

Delaware (United States)

Address: 380 Centerpoint Blvd, New Castle, DE 19720, United States
Tel: +1 (888) 468 7419
Email: us@fs.com

Birmingham (United Kingdom)

Address: Regus Edmund House, 12-22 Newhall Street, Birmingham, B3 3AS
Tel: +49 (0) 8165 4099 260
Email: uk@fs.com

Munich (Germany)

Address: NOVA Gewerbepark Building 7, Am Gfild 7,85375 Neufahrn bei Munich, Germany
Tel: +49 (0) 8165 4099 260
Email: de@fs.com

Melbourne (Australia)

Address: 57-59 Edison Rd, Dandenong South, VIC 3175, Australia
Tel: +61 3 9693 3488
Email: au@fs.com

Singapore

Address: 30A Kallang Pl, #11-10/11/12 Singapore 339213
Tel: +65 6443 7951
Email: sg@fs.com

Tokyo (Japan)

Address: JS Progress Building, 4-1-23 Heiwajima, Ota-ku, Tokyo 〒143-0006
Tel: 03-5826-8305
Email: jp@fs.com



FS has several offices around the world. Addresses, phone numbers are listed on the FS Website at https://www.fs.com/contact_us.html
FS and FS logo are trademarks or registered trademarks of FS in the U.S. and other countries.

Copyright © 2022 FS.COM All Rights Reserved