All-In-One Video Conference Camera

User Manual

Models : FC550S



User Manual

Contents

1.Package Contents 1
2.Functions 2
3.Product Overview 3
4.Product Overview 4
5.Installation 5
6.Connecting 6
7.Button Instructions 7
7.1 Microphone Mute 7
7.2 Increase Volume 7
7.3 Decrease Volume 7
7.4 Camera On/Off 7
8.LED Indicator 8
9.Notes & Warnings 9
10. Product Information 10
11.Regulatory Compliance 11

1.Package Contents

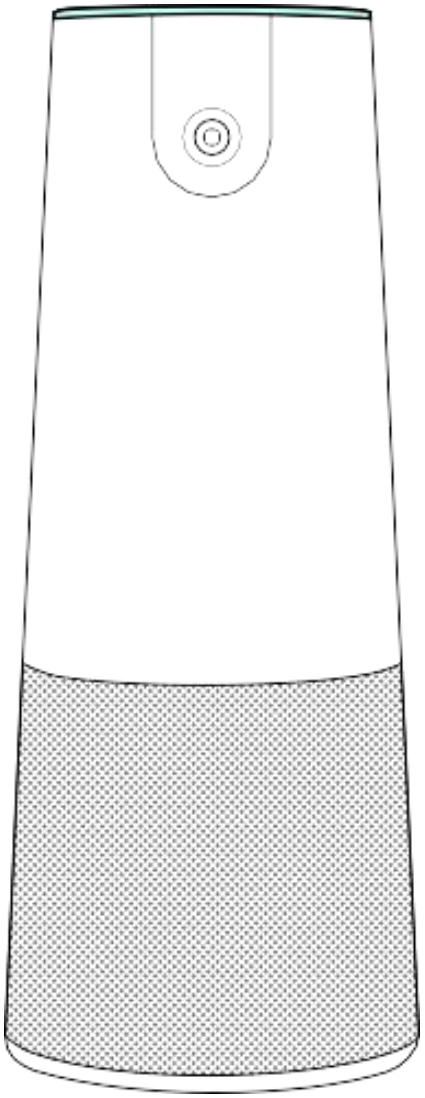

All-In-One Conference Camera

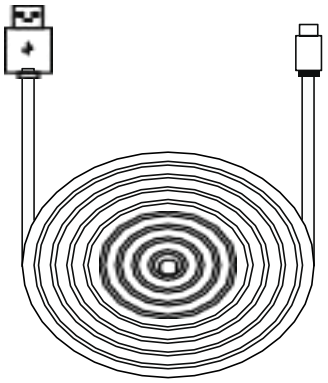

USB-C to USB-A Cable



User Guide

2.Functions

- 100° wide-angle distortionless camera captures all meeting participants clearly.
- 1080P@30fps Full HD video call.
- 4-Element omnidirectional microphones array picks up voices with HD quality.
- High quality, full range built-in speaker isoptimized for human voice.
- Up to 16.4-feet voice pickup radius and uninter-rupted full-duplex two-way communication.
- Noise-suppression, echo-cancellation, and competent under various acoustic environments.
- Plug & Play, connect to host device via USB.

3.Product Overview

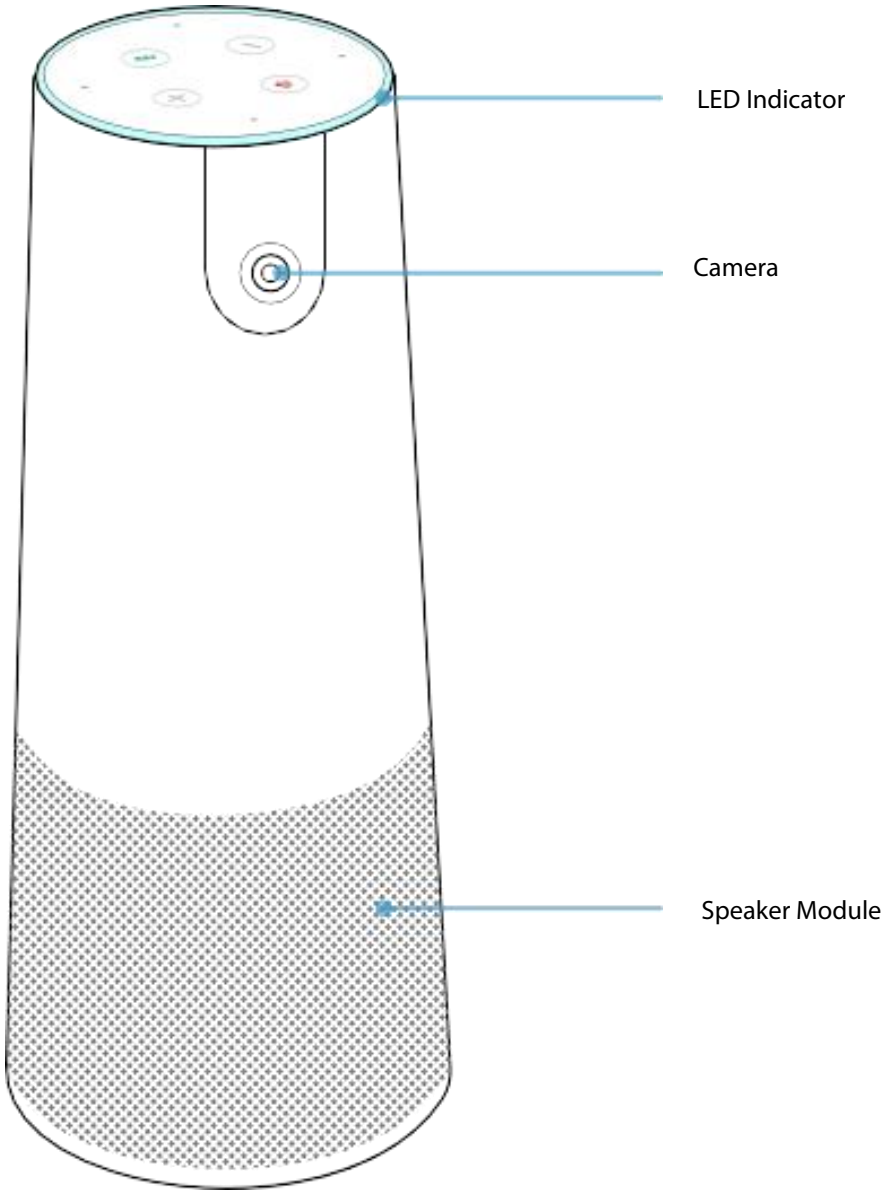

4.Product Overview

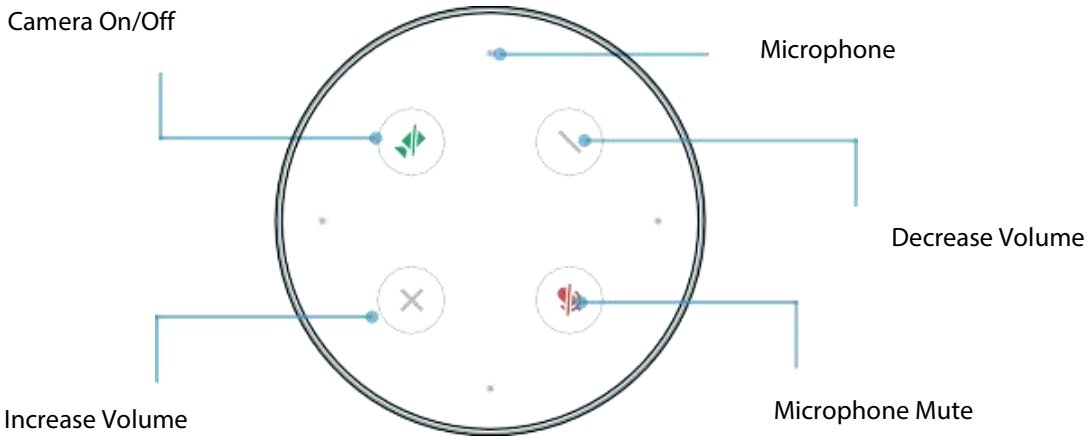

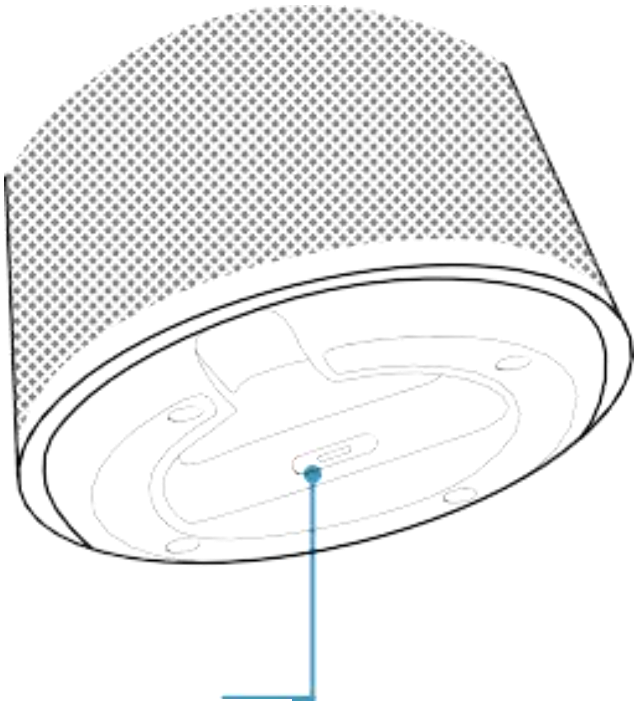

5.Installation

Easy to use, just place the all-in-one video conference camera on the table.

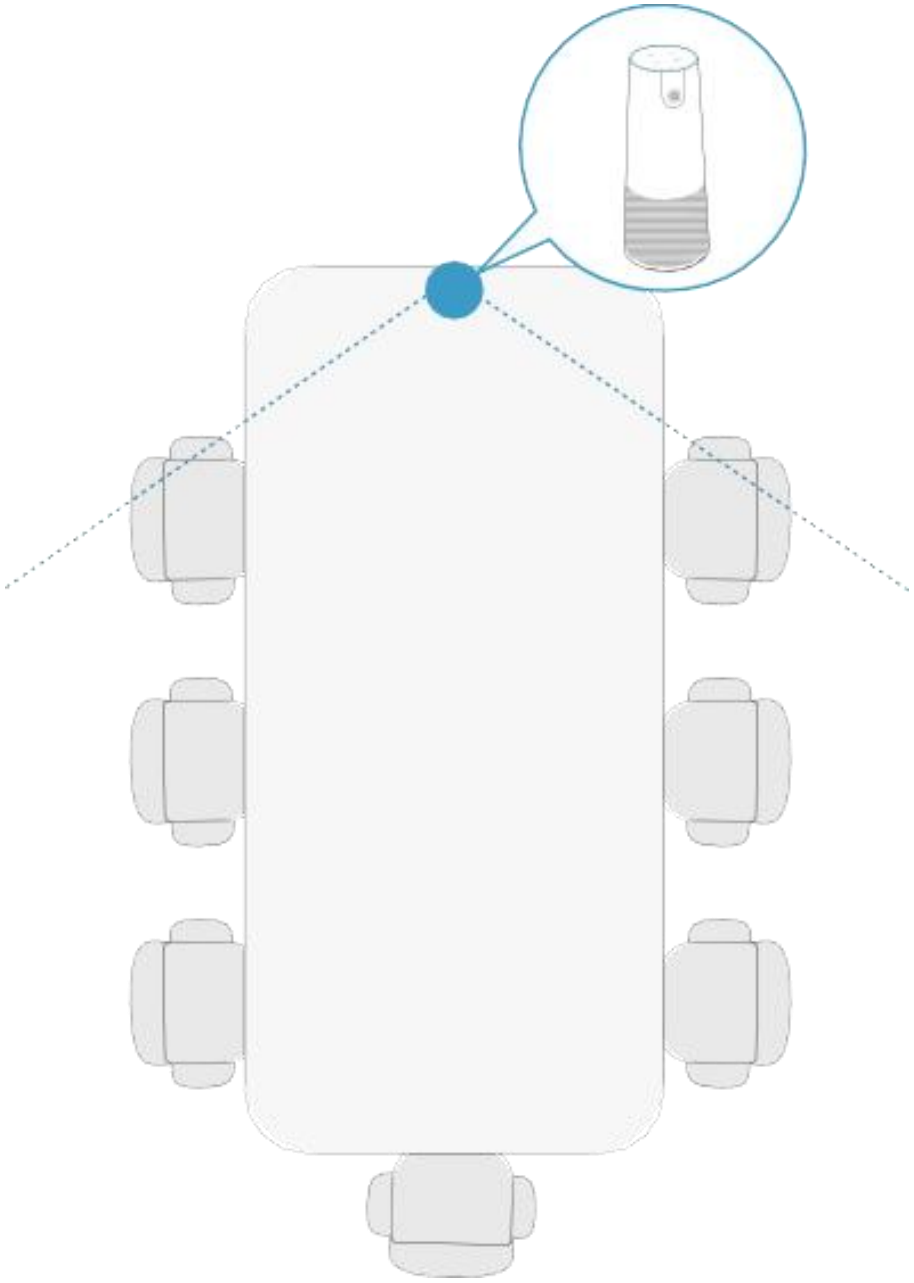

6.Connecting

Connect it to your host device (PC, Mac, Desktop or Interactive White Board) via the included USB Type-C cable.

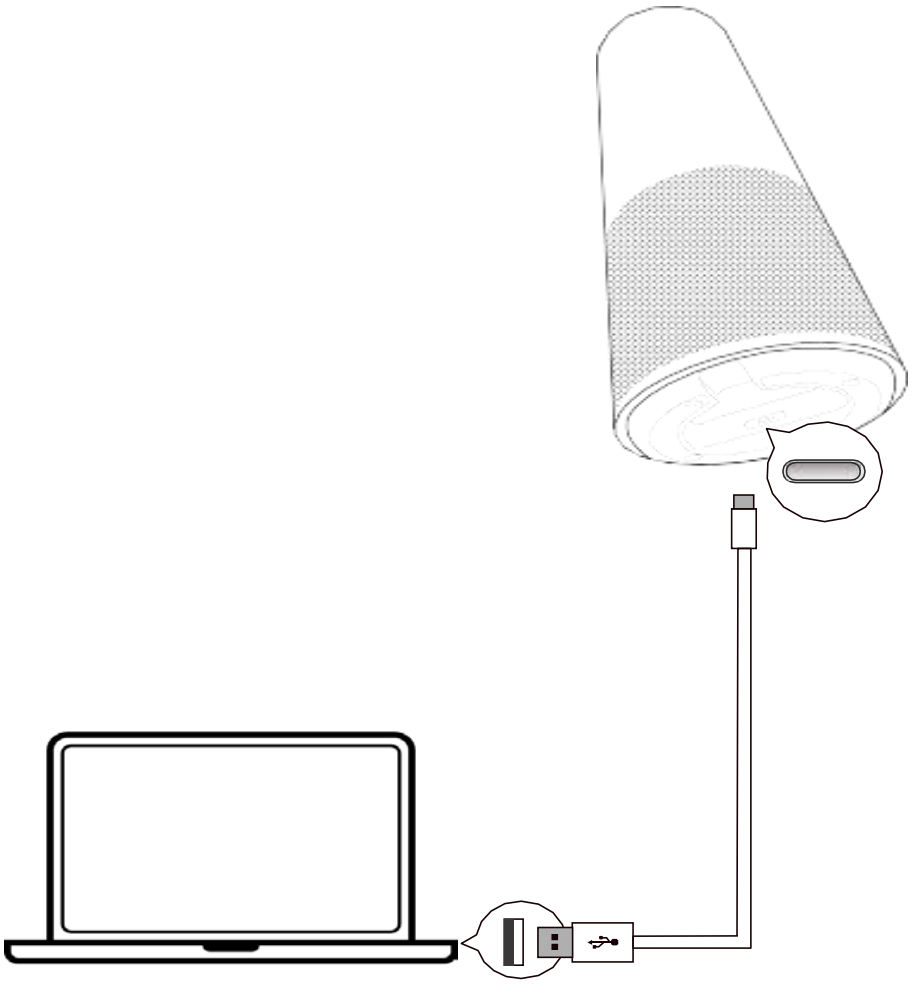

7.Button Instructions

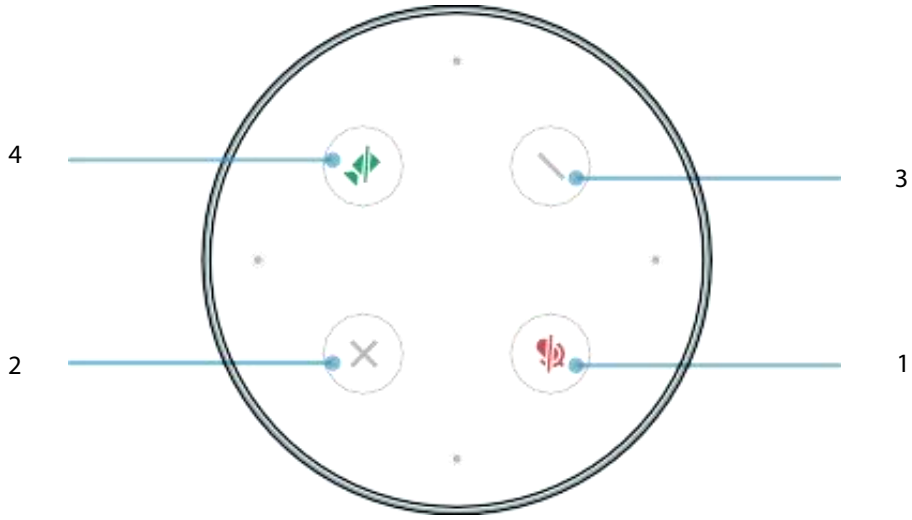

1 Microphone Mute

Touch the button to mute or unmute the microphone.

2 Increase Volume

Touch the button to increase speaker volume.

3 Decrease Volume

Touch the button to decrease speaker volume.

4 Camera On/Off

Touch the button to turn the camera on or off.

8.LED Indicator

	Power on
	USB device connected
	Microphone muted
	Camera off
	Microphone and camera off
	Firmware update is process

*The actual color of the LED indicator may be slightly different from what you see on a printed matter.

9.Notes & Warnings

Please read and follow all the safety instructions carefully.

1.Use the included USB cable to charge the device.

2.Unauthorized dismantlement and strong impact may damage the device.

3.Keep the device away from high-temperature environments, heat sources, strong magnetic, or electric fields.

4.Do not immerse the device in water or any other liquid. Store it in a dry and cool place.

5.Constant high volume sounds can harm human hearing.

6.Dispose of the packaging materials, device, battery, and other electronic components properly.

7.Do not dismantle, crush, or throw the battery into fire.

8.The packaging and the device contain small components that can be dangerous to children. Please keep them out of children's reach.

9.The device can be an interference source for other electronic devices and medical equipment.

10. Product Information

Dimensions

- 270mm(H)*110mm(Φ)

Weight

- 618g

Camera Specs

- F/2.4 aperture
- 1080P Video Output
- Horizontal FOV 100°
- Automatic White Balance
- Automatic Exposure
- Fixed focus

Video Specs

- FHD 1080P@30fps
- 16:9 Aspect Ratio

Speaker Specs

- Rated Output Power: 3W
- Speaker Frequency Response: 20Hz ~20kHz
- Speaker Volume: 90dB SPL @0dB 1kHz at 0.5m

Audio Specs

- 4-element Omnidirectional Microphone Array

Connectivity

- USB Type-C

USB Version

- USB 2.0

Input

- 5V 500mA

11.Regulatory Compliance

FCC Statements

This device complies with Part 15 of the FCC Rules. Operation issubject to the following two conditions: (1) this device may not cause harmful interference, and (2) this device must accept anyinterference received, including interference that may cause undesired operation.

Caution : The user is cautioned that changes or modifications not expressly approved by the party responsible for compliance couldvoid the user's authority to operate the equipment.

NOTE : This equipment has been tested and found to comply withthe limits for a Class A digital device, pursuant to part 15 of the FCC Rules. These limits are designed to provide reasonable protection against harmful interference when the equipment is operated in a commercial environment. This equipment generates, uses, and can radiate radio frequency energy and,if not installed and used in accordance with the instruction manual, may cause harmful interference to radio communica- tions. Operation of this equipment in a residential area is likely to cause harmful interference in which case the user will be requiredto correct the interference at his own expense.

LVD/EMC Directive

CE This product complies with the European Low Voltage Directive 2014/35/EU and EMC Directive 2014/30/EU

WEEE Directive–2012/19/EU



The product this manual refers to is covered by theWaste Electrical & Electronic Equipment (WEEE) Directive and must be disposed of in a responsiblemanner.