200G QSFP-DD QSFP56 TO 2 x100G QSFP56 Active Direct Attach Copper Breakout Cable



Application

- Data Center, High Performance Computing (HPC)

Features

- Enables 200Gb/s to 2x100Gb/s Transmission
- Maximum Link Length: Up to 7m
- Single 3.3V Power Supply
- Operating Case Temperature Range: 0 to +70°C
- Hot Pluggable
- Fully Compliant with the Latest SFF8665 QSFP MSA
- RoHS Compliant
- EEPROM in Cable Assembly
- Supports RS-FEC

Description

The FS's 200G QSFP56 to 2x100G QSFP56 Active Direct Attach Copper Cable is a high-speed, cost-effective alternative to fiber optics in 200Gb/s applications. This breakout cable is fully compliant with the SFF-8665 QSFP56 MSA standards.
It provides connectivity between system units with a 200G QSFP56 port on one end and two 100G QSFP56 ports on the other end and is suitable for close-range interconnections within the equipment room of telecom operators or data centers, etc.

Products Specifications

I. Absolute Maximum Ratings

Parameter	Symbol	Min.	Max.	Unit	Notes
Storage Temperature Range	T_S	-40	80	ºC	
Supply Voltage	V_{CC}	-0.5	3.6	V	
Operating Relative Humidity	RH		85	%	

II. Recommended Operating Conditions

Parameter	Symbol	Min.	Typical	Max.	Unit	Notes
Operating Case Temperature	T_{OPR}	0		70	ºC	
Power Supply Voltage	V_{CC}	3.135	3.3	3.465	V	
Data Rate	DR		200		Gbps	

III. General Product Characteristics

All performance is defined over the recommended operating environment unless otherwise specified.

Item	Parameter	Reference
SDD21	8dB<X<17.16dB @13.28 GHz	IEEE802.3cd, Clause 136.11.2
SDD11/22	-16.5+2*sqrt(f)dB Max. @0.05GHz-4.1GHz -10.66+14*1og(f/5.5) dB Max.@4.1GHz-19GHz	
SDD11/22	-22+(20/25.78) *f dB Max.@0.01GHz~12.89GHz -15+(6/25.78) *f dB Max.@12.89GHz~19GHz	IEEE802.3cd, Clause 136.11.4
SCD21-SDD21	-10dB Max. @0.01GHz~12.89GHz -27+(29/22) *f dB Max. @12.89GHz~15.7GHz -6.3dB Max. @15.7GHz~19GHz	IEEE802.3cd, Clause 136.11.5
SCC11/22	-2dB Max. @0.2GHz~19GHz	IEEE802.3cd, Clause 136.11.6
ICN	3 ≤ IL≤ 7.65: 5 mV Max. 7.65 ≤ IL ≤ 26: 12.75 - 0.49 *f mV Max. IL is the value @13.28GHz, f is in GHz	
COM	3dB Min.	
NEXT	-40dB Max.	

IV. Pin Descriptions

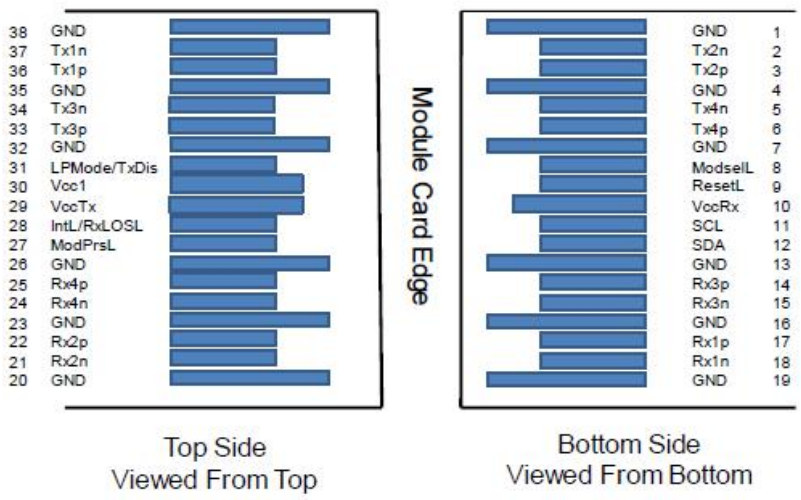

Pin	Logic	Symbol	Description
1		GND	Module Ground
2	CML-I	Tx2n	Transmitter Inverted Data Input
3	CML-I	Tx2p	Transmitter Non-inverted Data Input
4		GND	Module Ground
5	CML-I	Tx4n	Transmitter Inverted Data Input
6	CML-I	Tx4p	Transmitter Non-Inverted Data Input
7		GND	Module Ground
8	LVTTL-I	ModSelL	Module Select
9	LVTTL-I	ResetL	Module Reset
10		Vcc Rx	+3.3V Power Supply for Receiver
11	LVTTL-I	SCL	2-wire Serial Interface Clock

Pin	Logic	Symbol	Description
12	LVTTL-I/O	SDA	2-wire Serial Interface Data Line
13		GND	Module Ground
14	CML-O	Rx3p	Receiver Non-Inverted Data Output
15	CML-O	Rx3n	Receiver Inverted Data Output
16		GND	Module Ground
17	CML-O	Rx1p	Receiver Non-Inverted Data Output
18	CML-O	Rx1n	Receiver Inverted Data Output
19		GND	Module Ground
20		GND	Module Ground
21	CML-O	Rx2n	Receiver Inverted Data Output
22	CML-O	Rx2p	Receiver Non-Inverted Data Output
23		GND	Module Ground
24	CML-O	Rx4n	Receiver Inverted Data Output
25	CML-O	Rx4p	Receiver Non-Inverted Data Output
26		GND	Module Ground
27	LVTTL-O	ModPrsL	Module Present
28	LVTTL-O	IntL/RxLOSL	Interrupt. Optionally Configurable As Rxlosl Via The Management Interface (sff-8636)
29		VccTx	+3.3v Power Supply For Transmitter

Pin	Logic	Symbol	Description
30		Vcc1	+3.3v Power Supply
31	LVTTL-I	LPMode/TxDis	Low Power Mode. Optionally Configurable as TxDis via the Management Interface (SFF-8636).
32		GND	Module Ground
33	CML-I	Tx3p	Transmitter Non-Inverted Data Input
34	CML-I	Tx3n	Transmitter Inverted Data Input
35		GND	Module Ground
36	CML-I	Tx1p	Transmitter Non-Inverted Data Input
37	CML-I	Tx1n	Transmitter Inverted Data Input
38		GND	Module Ground

V. Diagram Mechanial Drawing

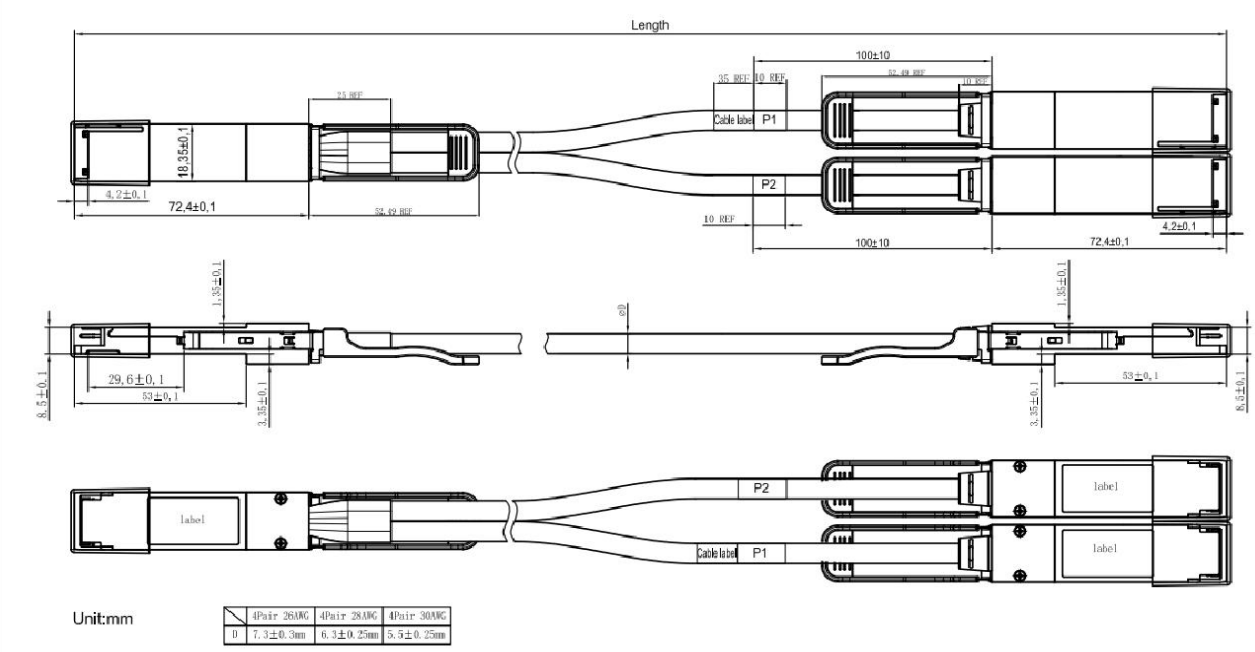

Unit:mm

	4Pair 26AWG	4Pair 28AWG	4Pair 30AWG
D	7.3±0.3mm	6.3±0.25mm	5.5±0.25mm

VI. EEPROM Information

The digital diagnostic memory map specific data field define as following. For detail EEPROM information, please refer to the related document of SFF 8636 Rev 2.10a

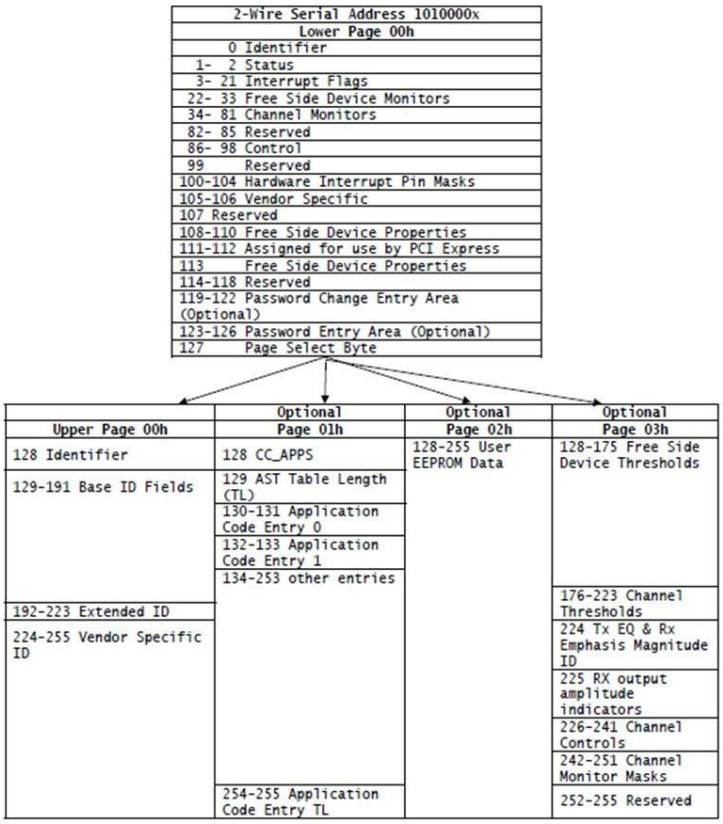

VII. ESD Ratings

This product is specified as ESD threshold 1kV for high speed data pins and 2kV for all other electrical input pins, tested per MIL-STD-883, Method 3015.4 /JESD22-A114-A (HBM). However, normal ESD precautions are still required during the handling of this module. This product is shipped in ESD protective packaging. It should be removed from the packaging and handled only in an ESD protected environment.

Test Center

I. Compatibility Testing

Each fiber optical transceiver has been tested in host device on site in FS Assured Program to ensure full compatibility with over 200 vendors.



Cisco Catalyst C9500-24Y4C

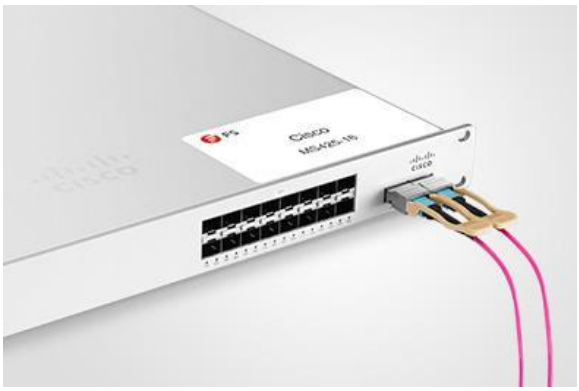

Cisco MS425-16



Brocade VDX 6940-144S



Dell EMC Networking Z9100-ON



Force⑩tm S60-44T



HUAWEI S6720-30L-HI-24S

Above is part of our test bed network equipment. For more information, please click the Test Bed PDF. It will be updated in real time as we expand our portfolio.

II. Performance Testing

Each fiber optical transceiver has been fully tested in FS Assured Program equipped with world's most advanced analytical equipment to ensure that our transceivers work perfectly on your device.

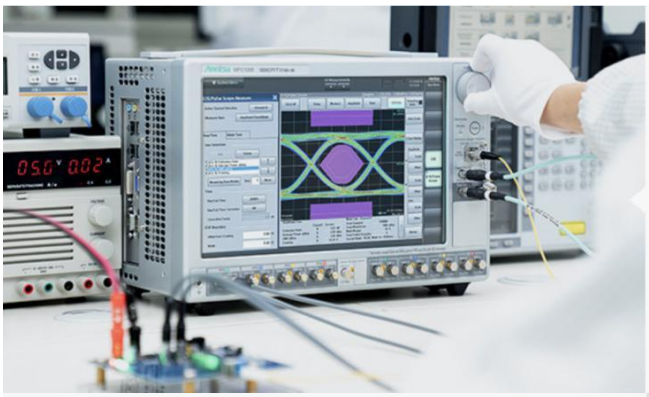

1. TX/RX Signal Quality Testing

Equipped with the all-in-one tester integrated 4ch BERT & sampling oscilloscope, and variable optical attenuator to ensure the input and output signal quality.

- Eye Pattern Measurements: Jitter, Mask Margin, etc
- Average Output Power
- OMA
- Extinction Ratio
- Receiver Sensitivity
- BER Curve

2. Reliability and Stability Testing

Subject the transceivers to dramatic changes in temperature on the thermal shock chamber to ensure reliability and stability of the transceivers.

- Commercial: 0 °C to 70 °C
- Extended: -5 °C to 85 °C
- Industrial: -40 °C to 85 °C





3. Transfer Rate and Protocol Testing

Test the actual transfer data rate and the transmission ability under different protocols with Network Master Pro.

- Ethernet
- Fibre Channel
- SDH/SONET
- CPRI

4. Optical Spectrum Evaluation

Evaluate various important parameters with the Optical Spectrum Analyzer to meet the industry standards.

- Center Wavelength, Level
- OSNR
- SMSR
- Spectrum Width

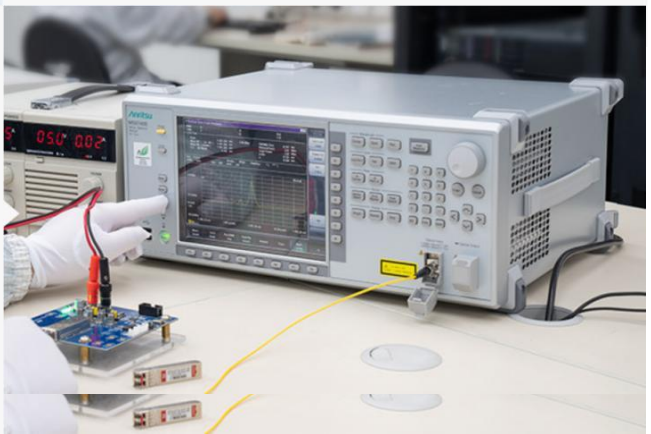

Order Information

Part Number	Data Rate	Length	Wire Gauge	Connector Type	Temp. Range	Cable Jacket
QSFP-200G-2QAC03	200G	3m	AWG30	Active Copper	0-70℃	PVC
QSFP-200G-2QAC05	200G	5m	AWG28	Active Copper	0-70℃	PVC
QSFP-200G-2QAC07	200G	7m	AWG26	Active Copper	0-70℃	PVC